YASKAWA

AC Servo Drives

Σ-V Series

USER'S MANUAL
Design and Maintenance

Rotational Motor
MECHATROLINK-III Communications Reference

SGDV SERVOPACK
SGMJV/SGMAV/SGMPS/SGMGV/SGMSV/SGMCS Servomotors

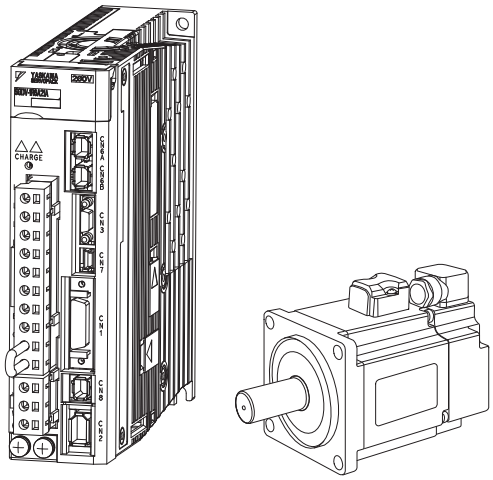

Outline 1
Panel Display and Operation of Digital Operator 2
Wiring and Connection 3
Operation 4
Adjustments 5
Utility Functions (Fn□□□) 6
Monitor Displays (Un□□□) 7
Fully-closed Loop Control 8
Troubleshooting 9
Appendix 10

MANUAL NO. SIEP S800000 64H

Copyright © 2008 YASKAWA ELECTRIC CORPORATION

All rights reserved. No part of this publication may be reproduced, stored in a retrieval system, or transmitted, in any form, or by any means, mechanical, electronic, photocopying, recording, or otherwise, without the prior written permission of Yaskawa. No patent liability is assumed with respect to the use of the information contained herein. Moreover, because Yaskawa is constantly striving to improve its high-quality products, the information contained in this manual is subject to change without notice. Every precaution has been taken in the preparation of this manual. Nevertheless, Yaskawa assumes no responsibility for errors or omissions. Neither is any liability assumed for damages resulting from the use of the information contained in this publication.

About this Manual

This manual describes information required for designing, testing, adjusting, and maintaining Σ-V Series SERVOPACKs.

Keep this manual in a location where it can be accessed for reference whenever required. Manuals outlined on the following page must also be used as required by the application.

■ Description of Technical Terms

The following table shows the meanings of terms used in this manual.

Term	Meaning
Cursor	Input position indicated by Digital Operator
Servomotor	Σ-V Series SGMJV, SGMAV, SGMPS, SGMGV, SGMSV, or SGMCS (Direct Drive) servomotor
SERVOPACK	Σ-V Series SGDV servo amplifier
Servo Drive	A set including a servomotor and SERVOPACK (i.e., a servo amplifier)
Servo System	A servo control system that includes the combination of a servo drive with a host controller and peripheral devices
M-III Model	MECHATROLINK-III communications reference used for SERVOPACK interface
Servo ON	Power to motor ON
Servo OFF	Power to motor OFF
Base Block (BB)	Power supply to motor is turned OFF by shutting off the base current to the power transistor in the current amplifier.
Servo Lock	A state in which the motor is stopped and is in position loop with a position reference of 0.
Main Circuit Cable	Cables which connect to the main circuit terminals, including main circuit power supply cables, control power supply cables, servomotor main circuit cables, and others.

■ IMPORTANT Explanations

The following icon is displayed for explanations requiring special attention.

IMPORTANT

- Indicates important information that should be memorized, as well as precautions, such as alarm displays, that do not involve potential damage to equipment.

■ Notation Used in this Manual

- Notation for Reverse Signals

  The names of reverse signals (i.e., ones that are valid when low) are written with a forward slash (/) before the signal name.

  Notation Example

  $\overline{\text{BK}}$ = /BK

- Notation for Parameters

  The notation depends on whether the parameter requires a value setting (parameter for numeric settings) or requires the selection of a function (parameter for selecting functions).

  - Parameters for Numeric Settings

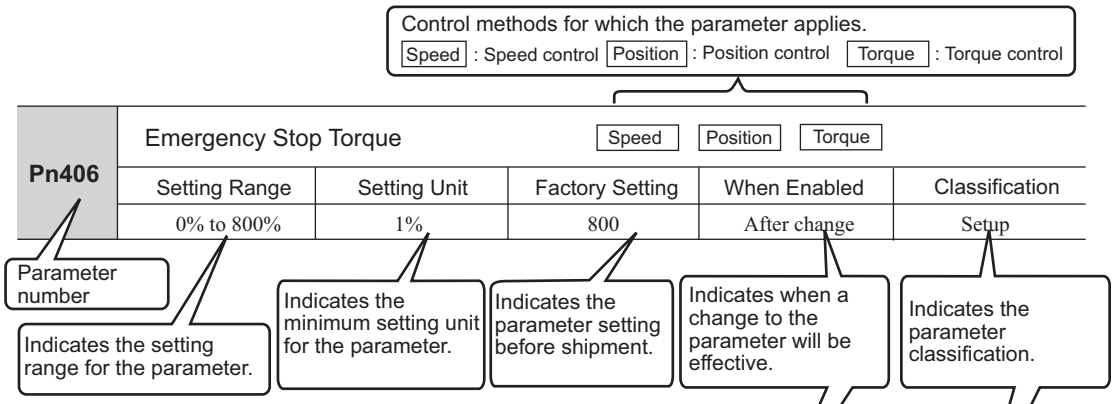

  - Parameters for Selecting Functions

Parameter		Meaning	When Enabled	Classification
Pn002	n.□0□□ [Factory setting]	Uses the absolute encoder as an absolute encoder.	After restart	Setup
	n.□1□□	Uses the absolute encoder as an incremental encoder.		

Parameter number

The notation "n.□□□□" indicates a parameter for selecting functions. Each □ corresponds to the setting value of that digit. The notation shown here means that the third digit is 1.

This section explains the selections for the function.

Notation Example

Digital Operator Display (Display Example for Pn002)

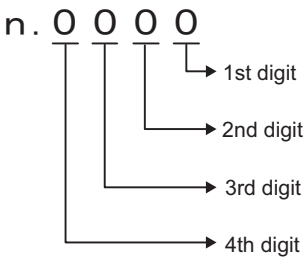

Digit Notation		Setting Notation	
Notation	Meaning	Notation	Meaning
Pn002.0	Indicates the value for the 1st digit of parameter Pn002.	Pn002.0 = x or n.□□□x	Indicates that the value for the 1st digit of parameter Pn002 is x.
Pn002.1	Indicates the value for the 2nd digit of parameter Pn002.	Pn002.1 = x or n.□□x□	Indicates that the value for the 2nd digit of parameter Pn002 is x.
Pn002.2	Indicates the value for the 3rd digit of parameter Pn002.	Pn002.2 = x or n.□x□□	Indicates that the value for the 3rd digit of parameter Pn002 is x.
Pn002.3	Indicates the value for the 4th digit of parameter Pn002.	Pn002.3 = x or n.x□□□	Indicates that the value for the 4th digit of parameter Pn002 is x.

■ Manuals Related to the Σ-V Series

Refer to the following manuals as required.

Name	Selecting Models and Peripheral Devices	Ratings and Specifications	System Design	Panels and Wiring	Trial Operation	Trial Operation and Servo Adjustment	Maintenance and Inspection
Σ-V Series User's Manual Setup Rotational Motor (No.: SIEP S800000 43)				✓	✓		
Σ-V Series Product Catalog (No.: KAEP S800000 42)	✓	✓	✓				
Σ-V Series User's Manual Design and Maintenance Rotational Motor/ MECHATROLINK-III Communications Reference (this manual)			✓		✓	✓	✓
Σ-V Series User's Manual MECHATROLINK-III Standard Servo Profile Commands (No.: SIEP S800000 63)			✓		✓	✓	
Σ-V Series User's Manual Operation of Digital Operator (No.: SIEP S800000 55)					✓	✓	✓
Σ-V Series AC SERVOPACK SGDV Safety Precautions (No.: TOBP C710800 10)	✓			✓			✓
Σ Series Digital Operator Safety Precautions (No.: TOBP C730800 00)							✓
AC SERVOMOTOR Safety Precautions (No.: TOBP C230200 00)				✓			✓

■ Trademarks

MECHATROLINK is a trademark of the MECHATROLINK Members Association.

Safety Information

The following conventions are used to indicate precautions in this manual. Failure to heed precautions provided in this manual can result in serious or possibly even fatal injury or damage to the products or to related equipment and systems.

⚠ WARNING	Indicates precautions that, if not heeded, could possibly result in loss of life or serious injury.
⚠ CAUTION	Indicates precautions that, if not heeded, could result in relatively serious or minor injury, damage to the product, or faulty operation. In some situations, the precautions indicated could have serious consequences if not heeded.
⃠ PROHIBITED	Indicates prohibited actions that must not be performed. For example, this symbol would be used to indicate that fire is prohibited as follows:
❗ MANDATORY	Indicates compulsory actions that must be performed. For example, this symbol would be used to indicate that grounding is compulsory as follows:

Safety Precautions

This section describes important precautions that must be followed during storage, transportation, installation, wiring, operation, maintenance, inspection, and disposal. Be sure to always observe these precautions thoroughly.

⚠ WARNING

- Never touch any rotating servomotor parts during operation.
  Failure to observe this warning may result in injury.
- Before starting operation with a machine connected, make sure that an emergency stop can be applied at any time.
  Failure to observe this warning may result in injury or damage to the equipment.
- Never touch the inside of the SERVOPACKs.
  Failure to observe this warning may result in electric shock.
- Do not remove the cover of the power supply terminal block while the power is ON.
  Failure to observe this warning may result in electric shock.
- After the power is turned OFF or after a voltage resistance test, do not touch terminals while the CHARGE lamp is ON.
  Residual voltage may cause electric shock.
- Follow the procedures and instructions provided in the manuals for the products being used in the trial operation.
  Failure to do so may result not only in faulty operation and damage to equipment, but also in personal injury.
- The output range of the rotational serial data for the Σ-V absolute position detecting system is different from that of earlier systems for 12-bit and 15-bit encoders. As a result, the infinite-length positioning system of the Σ Series must be changed for use with products in the Σ-V Series.
- The multiturn limit value need not be changed except for special applications.
  Changing it inappropriately or unintentionally can be dangerous.
- If the Multiturn Limit Disagreement alarm occurs, check the setting of parameter Pn205 in the SERVOPACK to be sure that it is correct.
  If Fn013 is executed when an incorrect value is set in Pn205, an incorrect value will be set in the encoder. The alarm will disappear even if an incorrect value is set, but incorrect positions will be detected, resulting in a dangerous situation where the machine will move to unexpected positions.
- Do not remove the top front cover, cables, connectors, or optional items from the SERVOPACK while the power is ON.
  Failure to observe this warning may result in electric shock.
- Do not damage, pull, exert excessive force on, or place heavy objects on the cables.
  Failure to observe this warning may result in electric shock, stopping operation of the product, or fire.
- Do not modify the product.
  Failure to observe this warning may result in injury, damage to the equipment, or fire.
- Provide appropriate braking devices on the machine side to ensure safety. The holding brake on a servomotor with a brake is not a braking device for ensuring safety.
  Failure to observe this warning may result in injury.
- Do not come close to the machine immediately after resetting an instantaneous power interruption to avoid an unexpected restart. Take appropriate measures to ensure safety against an unexpected restart.
  Failure to observe this warning may result in injury.
- Connect the ground terminal according to local electrical codes (100 Ω or less for a SERVOPACK with a 100 V, 200 V power supply, 10 Ω or less for a SERVOPACK with a 400 V power supply).
  Improper grounding may result in electric shock or fire.
- Installation, disassembly, or repair must be performed only by authorized personnel.
  Failure to observe this warning may result in electric shock or injury.
- The person who designs a system using the safety function (Hard Wire Baseblock function) must have full knowledge of the related safety standards and full understanding of the instructions in this manual.
  Failure to observe this warning may result in injury or damage to the equipment.

■ Storage and Transportation

⚠ CAUTION

- Do not store or install the product in the following locations.
  Failure to observe this caution may result in fire, electric shock, or damage to the equipment.
  - Locations subject to direct sunlight
  - Locations subject to temperatures outside the range specified in the storage/installation temperature conditions
  - Locations subject to humidity outside the range specified in the storage/installation humidity conditions
  - Locations subject to condensation as the result of extreme changes in temperature
  - Locations subject to corrosive or flammable gases
  - Locations subject to dust, salts, or iron dust
  - Locations subject to exposure to water, oil, or chemicals
  - Locations subject to shock or vibration
- Do not hold the product by the cables, motor shaft, or encoder while transporting it.
  Failure to observe this caution may result in injury or malfunction.
- Do not place any load exceeding the limit specified on the packing box.
  Failure to observe this caution may result in injury or malfunction.
- If disinfectants or insecticides must be used to treat packing materials such as wooden frames, pallets, or plywood, the packing materials must be treated before the product is packaged, and methods other than fumigation must be used.
  Example: Heat treatment, where materials are kiln-dried to a core temperature of 56°C for 30 minutes or more.
  If the electronic products, which include stand-alone products and products installed in machines, are packed with fumigated wooden materials, the electrical components may be greatly damaged by the gases or fumes resulting from the fumigation process. In particular, disinfectants containing halogen, which includes chlorine, fluorine, bromine, or iodine can contribute to the erosion of the capacitors.

■ Installation

⚠ CAUTION

- Never use the product in an environment subject to water, corrosive gases, flammable gases, or combustibles.
  Failure to observe this caution may result in electric shock or fire.
- Do not step on or place a heavy object on the product.
  Failure to observe this caution may result in injury or malfunction.
- Do not cover the inlet or outlet ports and prevent any foreign objects from entering the product.
  Failure to observe this caution may cause internal elements to deteriorate resulting in malfunction or fire.
- Be sure to install the product in the correct direction.
  Failure to observe this caution may result in malfunction.
- Provide the specified clearances between the SERVOPACK and the control panel or with other devices.
  Failure to observe this caution may result in fire or malfunction.
- Do not apply any strong impact.
  Failure to observe this caution may result in malfunction.

■ Wiring

⚠ CAUTION

- Be sure to wire correctly and securely.
  Failure to observe this caution may result in motor overrun, injury, or malfunction.
- Do not connect a commercial power supply to the U, V, or W terminals for the servomotor connection.
  Failure to observe this caution may result in injury or fire.
- Securely connect the main circuit terminals.
  Failure to observe this caution may result in fire.
- Do not bundle or run the main circuit cables together with the I/O signal cables or the encoder cables in the same duct. Keep the main circuit cables separated from the I/O signal cables and the encoder cables with a gap of at least 30 cm.
  Placing these cables too close to each other may result in malfunction.
- Use shielded twisted-pair cables or screened unshielded twisted-pair cables for I/O signal cables and the encoder cables.
- The maximum wiring length is 3 m for I/O signal cables, 50 m for encoder cables or servomotor main circuit cables, and 10 m for control power supply cables for the SERVOPACK with a 400-V power supply (+24 V, 0 V).
- Do not touch the power supply terminals while the CHARGE lamp is ON after turning power OFF because high voltage may still remain in the SERVOPACK.
  Make sure the charge indicator is OFF first before starting to do wiring or inspections.
- Be sure to observe the following precautions when wiring the SERVOPACK main circuit terminal blocks.
  - Do not turn the SERVOPACK power ON until all wiring, including the main circuit terminal blocks, has been completed.
  - Remove detachable main circuit terminals from the SERVOPACK prior to wiring.
  - Insert only one power line per opening in the main circuit terminals.
  - Make sure that no part of the core wire comes into contact with (i.e., short-circuits) adjacent wires.
- Install a battery at either the host controller or the SERVOPACK, but not both.
  It is dangerous to install batteries at both ends simultaneously, because that sets up a loop circuit between the batteries.
- Always use the specified power supply voltage.
  An incorrect voltage may result in fire or malfunction.
- Make sure that the polarity is correct.
  Incorrect polarity may cause ruptures or damage.
- Take appropriate measures to ensure that the input power supply is supplied within the specified voltage fluctuation range. Be particularly careful in places where the power supply is unstable.
  An incorrect power supply may result in damage to the equipment.
- Install external breakers or other safety devices against short-circuiting in external wiring.
  Failure to observe this caution may result in fire.
- Take appropriate and sufficient countermeasures for each form of potential interference when installing systems in the following locations.
  - Locations subject to static electricity or other forms of noise
  - Locations subject to strong electromagnetic fields and magnetic fields
  - Locations subject to possible exposure to radioactivity
  - Locations close to power supplies

  Failure to observe this caution may result in damage to the equipment.
- Do not reverse the polarity of the battery when connecting it.
  Failure to observe this caution may damage the battery, the SERVOPACK or servomotor, or cause an explosion.
- Wiring or inspection must be performed by a technical expert.
- Use a 24-VDC power supply with double insulation or reinforced insulation.

Operation

⚠ CAUTION

- Always use the servomotor and SERVOPACK in one of the specified combinations.
  Failure to observe this caution may result in fire or malfunction.
- Conduct trial operation on the servomotor alone with the motor shaft disconnected from the machine to avoid accidents.
  Failure to observe this caution may result in injury.
- During trial operation, confirm that the holding brake works correctly. Furthermore, secure system safety against problems such as signal line disconnection.
- Before starting operation with a machine connected, change the parameter settings to match the parameters of the machine.
  Starting operation without matching the proper settings may cause the machine to run out of control or malfunction.
- Do not turn the power ON and OFF more than necessary.
  Do not use the SERVOPACK for applications that require the power to turn ON and OFF frequently. Such applications will cause elements in the SERVOPACK to deteriorate.
  As a guideline, at least one hour should be allowed between the power being turned ON and OFF once actual operation has been started.
- When carrying out JOG operation (Fn002), origin search (Fn003), or EasyFFT (Fn206), forcing movable machine parts to stop does not work for forward overtravel or reverse overtravel. Take necessary precautions.
  Failure to observe this caution may result in damage to the equipment.
- When using the servomotor for a vertical axis, install safety devices to prevent workpieces from falling due to alarms or overtravels. Set the servomotor so that it will stop in the zero clamp state when overtravel occurs.
  Failure to observe this caution may cause workpieces to fall due to overtravel.
- When not using the turning-less function, set the correct moment of inertia ratio (Pn103).
  Setting an incorrect moment of inertia ratio may cause machine vibration.
- Do not touch the SERVOPACK heat sinks, regenerative resistor, or servomotor while power is ON or soon after the power is turned OFF.
  Failure to observe this caution may result in burns due to high temperatures.
- Do not make any extreme adjustments or setting changes of parameters.
  Failure to observe this caution may result in injury or damage to the equipment due to unstable operation.
- When an alarm occurs, remove the cause, reset the alarm after confirming safety, and then resume operation.
  Failure to observe this caution may result in damage to the equipment, fire, or injury.
- Do not use the holding brake of the servomotor for braking.
  Failure to observe this caution may result in malfunction.
- An alarm or warning may occur if communications are performed with the host controller while the SigmaWin+ or Digital Operator is operating.
  If an alarm or warning occurs, it may stop the current process and stop the system.

Maintenance and Inspection

⚠ CAUTION

- Do not disassemble the SERVOPACK and the servomotor.
  Failure to observe this caution may result in electric shock or injury.
- Do not attempt to change wiring while the power is ON.
  Failure to observe this caution may result in electric shock or injury.
- When replacing the SERVOPACK, resume operation only after copying the previous SERVOPACK parameters to the new SERVOPACK.
  Failure to observe this caution may result in damage to the equipment.

Disposal

⚠ CAUTION

- When disposing of the products, treat them as ordinary industrial waste.

General Precautions

Observe the following general precautions to ensure safe application.
• The products shown in illustrations in this manual are sometimes shown without covers or protective guards. Always replace the cover or protective guard as specified first, and then operate the products in accordance with the manual. • The drawings presented in this manual are typical examples and may not match the product you received. • If the manual must be ordered due to loss or damage, inform your nearest Yaskawa representative or one of the offices listed on the back of this manual.

Warranty

(1) Details of Warranty

■ Warranty Period

The warranty period for a product that was purchased (hereinafter called “delivered product”) is one year from the time of delivery to the location specified by the customer or 18 months from the time of shipment from the Yaskawa factory, whichever is sooner.

■ Warranty Scope

Yaskawa shall replace or repair a defective product free of charge if a defect attributable to Yaskawa occurs during the warranty period above. This warranty does not cover defects caused by the delivered product reaching the end of its service life and replacement of parts that require replacement or that have a limited service life.

This warranty does not cover failures that result from any of the following causes.

1. Improper handling, abuse, or use in unsuitable conditions or in environments not described in product catalogs or manuals, or in any separately agreed-upon specifications
2. Causes not attributable to the delivered product itself
3. Modifications or repairs not performed by Yaskawa
4. Abuse of the delivered product in a manner in which it was not originally intended
5. Causes that were not foreseeable with the scientific and technological understanding at the time of shipment from Yaskawa
6. Events for which Yaskawa is not responsible, such as natural or human-made disasters

(2) Limitations of Liability

1. Yaskawa shall in no event be responsible for any damage or loss of opportunity to the customer that arises due to failure of the delivered product.
2. Yaskawa shall not be responsible for any programs (including parameter settings) or the results of program execution of the programs provided by the user or by a third party for use with programmable Yaskawa products.
3. The information described in product catalogs or manuals is provided for the purpose of the customer purchasing the appropriate product for the intended application. The use thereof does not guarantee that there are no infringements of intellectual property rights or other proprietary rights of Yaskawa or third parties, nor does it construe a license.
4. Yaskawa shall not be responsible for any damage arising from infringements of intellectual property rights or other proprietary rights of third parties as a result of using the information described in catalogs or manuals.

(3) Suitability for Use

1. It is the customer's responsibility to confirm conformity with any standards, codes, or regulations that apply if the Yaskawa product is used in combination with any other products.
2. The customer must confirm that the Yaskawa product is suitable for the systems, machines, and equipment used by the customer.
3. Consult with Yaskawa to determine whether use in the following applications is acceptable. If use in the application is acceptable, use the product with extra allowance in ratings and specifications, and provide safety measures to minimize hazards in the event of failure.
   - Outdoor use, use involving potential chemical contamination or electrical interference, or use in conditions or environments not described in product catalogs or manuals
   - Nuclear energy control systems, combustion systems, railroad systems, aviation systems, vehicle systems, medical equipment, amusement machines, and installations subject to separate industry or government regulations
   - Systems, machines, and equipment that may present a risk to life or property
   - Systems that require a high degree of reliability, such as systems that supply gas, water, or electricity, or systems that operate continuously 24 hours a day
   - Other systems that require a similar high degree of safety
4. Never use the product for an application involving serious risk to life or property without first ensuring that the system is designed to secure the required level of safety with risk warnings and redundancy, and that the Yaskawa product is properly rated and installed.
5. The circuit examples and other application examples described in product catalogs and manuals are for reference. Check the functionality and safety of the actual devices and equipment to be used before using the product.
6. Read and understand all use prohibitions and precautions, and operate the Yaskawa product correctly to prevent accidental harm to third parties.

(4) Specifications Change

The names, specifications, appearance, and accessories of products in product catalogs and manuals may be changed at any time based on improvements and other reasons. The next editions of the revised catalogs or manuals will be published with updated code numbers. Consult with your Yaskawa representative to confirm the actual specifications before purchasing a product.

Harmonized Standards

■ North American Safety Standards (UL)

	Model	UL Standards (UL File No.)
SERVOPACK	SGDV	UL508C (E147823)
Servomotor	• SGMJV • SGMAV • SGMPS • SGMGV • SGMSV	UL1004 (E165827)

■ European Directives

	Model	European Directives	Harmonized Standards
SERVOPACK	SGDV	Machinery Directive 2006/42/EC	EN ISO13849-1: 2008 EN 954-1
		EMC Directive 2004/108/EC	EN 55011 group 1 class A EN 61000-6-2 EN 61800-3
		Low Voltage Directive 2006/95/EC	EN 50178 EN 61800-5-1
Servomotor	• SGMJV • SGMAV • SGMPS • SGMGV • SGMSV	EMC Directive 2004/108/EC	EN 55011 group 1 class A EN 61000-6-2 EN 61800-3
		Low Voltage Directive 2006/95/EC	EN 60034-1 EN 60034-5

■ Safety Standards

	Model	Safety Standards	Standards
SERVOPACK	SGDV	Safety of Machinery	EN ISO13849-1: 2008 EN 954-1 IEC 60204-1
		Functional Safety	IEC 61508 series IEC 62061 IEC 61800-5-2
		EMC	IEC 61326-3-1

■ Safe Performance

Items	Standards	Performance Level
Safety Integrity Level	IEC 61508	SIL2
	IEC 62061	SILCL2
Probability of Dangerous Failure per Hour	IEC 61508 IEC 62061	PFH $\Leftarrow 1.7\times10^{-9}$ [1/h] (0.17% of SIL2)
Category	EN 954-1	Category 3
Performance Level	EN ISO 13849-1	PL d (Category 3)
Mean Time to Dangerous Failure of Each Channel	EN ISO 13849-1	MTTFd: High
Average Diagnostic Coverage	EN ISO 13849-1	DCave: Low
Stop Category	IEC 60204-1	Stop category 0
Safety Function	IEC 61800-5-2	STO
Proof test Interval	IEC 61508	10 years

Contents

About this Manual . . . iii
Safety Precautions . . . vii
Warranty . . . xii
Harmonized Standards . . . xiv

Chapter 1 Outline . . . 1-1
1.1 Σ-V Series SERVOPACKs . . . 1-2
1.2 Part Names . . . 1-2
1.3 SERVOPACK Ratings and Specifications . . . 1-3
1.3.1 Ratings . . . 1-3
1.3.2 Basic Specifications . . . 1-5
1.3.3 MECHATROLINK-III Function Specifications . . . 1-8
1.4 SERVOPACK Internal Block Diagrams . . . 1-9
1.4.1 Single-phase 100 V, SGDV-R70F21A, -R90F21A, -2R1F21A Models . . . 1-9
1.4.2 Single-phase 100 V, SGDV-2R8F21A Model . . . 1-9
1.4.3 Single-phase 200 V, SGDV-120A21A008000 Model . . . 1-10
1.4.4 Three-phase 200 V, SGDV-R70A21□, -R90A21□, -1R6A21□ Models . . . 1-10
1.4.5 Three-phase 200 V, SGDV-2R8A21□ Model . . . 1-11
1.4.6 Three-phase 200 V, SGDV-3R8A21A, -5R5A21A, -7R6A21A Models . . . 1-11
1.4.7 Three-phase 200 V, SGDV-120A21A Model . . . 1-12
1.4.8 Three-phase 200 V, SGDV-180A21A, -200A21A Models . . . 1-12
1.4.9 Three-phase 200 V, SGDV-330A21A Model . . . 1-13
1.4.10 Three-phase 200 V, SGDV-470A21A, -550A21A Models . . . 1-13
1.4.11 Three-phase 200 V SGDV-590A21A, -780A21A Models . . . 1-14
1.4.12 Three-phase 400 V, SGDV-1R9D21A, -3R5D21A, -5R4D21A Models . . . 1-14
1.4.13 Three-phase 400 V, SGDV-8R4D21A, -120D21A Models . . . 1-15
1.4.14 Three-phase 400 V, SGDV-170D21A Model . . . 1-15
1.4.15 Three-phase 400 V, SGDV-210D21A, -260D21A Models . . . 1-16
1.4.16 Three-phase 400 V, SGDV-280D21A, -370D21A Models . . . 1-16
1.5 Examples of Servo System Configurations . . . 1-17
1.5.1 Connecting to SGDV-□□□F21A SERVOPACK . . . 1-17
1.5.2 Connecting to SGDV-□□□A21□ SERVOPACK . . . 1-18
1.5.3 Connecting to SGDV-□□□D21A SERVOPACK . . . 1-20
1.6 SERVOPACK Model Designation . . . 1-21
1.7 Inspection and Maintenance . . . 1-22

Chapter 2 Panel Display and Operation of Digital Operator . . . 2-1
2.1 Panel Display . . . 2-2
2.1.1 Status Display . . . 2-2
2.1.2 Alarm and Warning Display . . . 2-2
2.1.3 Hard Wire Base Block Display . . . 2-2
2.1.4 Overtravel Display . . . 2-2
2.2 Operation of Digital Operator . . . 2-3
2.3 Utility Functions (Fn□□□) . . . 2-3
2.4 Parameters (Pn□□□) . . . 2-4
2.4.1 Parameter Classification . . . 2-4
2.4.2 Notation for Parameters . . . 2-4
2.4.3 Setting Parameters . . . 2-5
2.5 Monitor Displays (Un□□□) . . . 2-7

Chapter 3 Wiring and Connection 3-1
3.1 Main Circuit Wiring 3-2
3.1.1 Main Circuit Terminals 3-2
3.1.2 Using a Standard Power Supply (Single-phase 100 V, Three-phase 200 V, or Three-phase 400 V) 3-3
3.1.3 Using the SERVOPACK with Single-phase, 200 V Power Input 3-11
3.1.4 Using the SERVOPACK with a DC Power Input 3-14
3.1.5 Using More Than One SERVOPACK 3-16
3.1.6 General Precautions for Wiring 3-17
3.2 I/O Signal Connections 3-18
3.2.1 I/O Signal (CN1) Names and Functions 3-18
3.2.2 Safety Function Signal (CN8) Names and Functions 3-19
3.2.3 Example of I/O Signal Connections 3-20
3.3 I/O Signal Allocations 3-21
3.3.1 Input Signal Allocations 3-21
3.3.2 Output Signal Allocations 3-23
3.4 Examples of Connection to Host Controller 3-24
3.4.1 Sequence Input Circuit 3-24
3.4.2 Sequence Output Circuit 3-25
3.5 Wiring MECHATROLINK-III Communications 3-27
3.6 Encoder Connection 3-28
3.6.1 Encoder Signal (CN2) Names and Functions 3-28
3.6.2 Encoder Connection Examples 3-28
3.7 Connecting Regenerative Resistors 3-30
3.7.1 Connecting Regenerative Resistors 3-30
3.7.2 Setting Regenerative Resistor Capacity 3-32
3.8 Noise Control and Measures for Harmonic Suppression 3-33
3.8.1 Wiring for Noise Control 3-33
3.8.2 Precautions on Connecting Noise Filter 3-35
3.8.3 Connecting a Reactor for Harmonic Suppression 3-36

Chapter 4 Operation 4-1
4.1 MECHATROLINK-III Communications Settings 4-3
4.1.1 Setting Switches S1, S2, and S3 4-3
4.2 MECHATROLINK-III Commands 4-4
4.3 Basic Functions Settings 4-4
4.3.1 Servomotor Rotation Direction 4-4
4.3.2 Overtravel 4-5
4.3.3 Software Limit Settings 4-8
4.3.4 Holding Brakes 4-9
4.3.5 Stopping Servomotors after SV_OFF Command or Alarm Occurrence 4-14
4.3.6 Instantaneous Power Interruption Settings 4-16
4.3.7 SEMI F47 Function (Torque Limit Function for Low DC Power Supply Voltage for Main Circuit) 4-17
4.3.8 Setting Motor Overload Detection Level 4-20
4.4 Trial Operation 4-22
4.4.1 Inspection and Checking before Trial Operation 4-22
4.4.2 Trial Operation via MECHATROLINK-III 4-23
4.4.3 Electronic Gear 4-24
4.4.4 Encoder Output Pulses 4-26
4.4.5 Setting Encoder Output Pulse 4-27
4.5 Test Without Motor Function 4-28
4.5.1 Motor Information 4-28
4.5.2 Motor Position and Speed Responses 4-29
4.5.3 Limitations 4-30
4.5.4 Digital Operator Displays during Testing without Motor 4-31

4.6 Limiting Torque 4-32
4.6.1 Internal Torque Limit 4-32
4.6.2 External Torque Limit 4-33
4.6.3 Checking Output Torque Limiting during Operation 4-34
4.7 Absolute Encoders 4-35
4.7.1 Connecting the Absolute Encoder 4-36
4.7.2 Absolute Data Request (SENS ON Command) 4-38
4.7.3 Battery Replacement 4-39
4.7.4 Absolute Encoder Setup and Reinitialization 4-41
4.7.5 Absolute Data Reception Sequence 4-42
4.7.6 Multiturn Limit Setting 4-47
4.7.7 Multiturn Limit Disagreement Alarm (A.CC0) 4-48
4.7.8 Absolute Encoder Origin Offset 4-49
4.8 Other Output Signals 4-50
4.8.1 Servo Alarm Output Signal (ALM) 4-50
4.8.2 Warning Output Signal (/WARN) 4-50
4.8.3 Rotation Detection Output Signal (/TGON) 4-51
4.8.4 Servo Ready Output Signal (/S-RDY) 4-51
4.8.5 Speed Coincidence Output Signal (/V-CMP) 4-52
4.8.6 Positioning Completed Output Signal (/COIN) 4-53
4.8.7 Positioning Near Output Signal (/NEAR) 4-54
4.8.8 Speed Limit Detection Signal (/VLT) 4-55
4.9 Safety Function 4-57
4.9.1 Hard Wire Base Block (HWBB) Function 4-57
4.9.2 External Device Monitor (EDM1) 4-63
4.9.3 Application Example of Safety Functions 4-65
4.9.4 Confirming Safety Functions 4-66
4.9.5 Connecting a Safety Function Device 4-67
4.9.6 Precautions for Safety Functions 4-69

Chapter 5 Adjustments 5-1
5.1 Type of Adjustments and Basic Adjustment Procedure 5-3
5.1.1 Adjustments 5-3
5.1.2 Basic Adjustment Procedure 5-4
5.1.3 Monitoring Operation during Adjustment 5-5
5.1.4 Safety Precautions on Adjustment of Servo Gains 5-8
5.2 Tuning-less Function 5-11
5.2.1 Tuning-less Function 5-11
5.2.2 Tuning-less Levels Setting (Fn200) Procedure 5-14
5.2.3 Related Parameters 5-16
5.3 Advanced Autotuning (Fn201) 5-17
5.3.1 Advanced Autotuning 5-17
5.3.2 Advanced Autotuning Procedure 5-20
5.3.3 Related Parameters 5-26
5.4 Advanced Autotuning by Reference (Fn202) 5-27
5.4.1 Advanced Autotuning by Reference 5-27
5.4.2 Advanced Autotuning by Reference Procedure 5-29
5.4.3 Related Parameters 5-33
5.5 One-parameter Tuning (Fn203) 5-34
5.5.1 One-parameter Tuning 5-34
5.5.2 One-parameter Tuning Procedure 5-35
5.5.3 One-parameter Tuning Example 5-41
5.5.4 Related Parameters 5-42
5.6 Anti-Resonance Control Adjustment Function (Fn204) 5-43
5.6.1 Anti-Resonance Control Adjustment Function 5-43
5.6.2 Anti-Resonance Control Adjustment Function Operating Procedure 5-44
5.6.3 Related Parameters 5-48

5.7 Vibration Suppression Function (Fn205) 5-49
5.7.1 Vibration Suppression Function 5-49
5.7.2 Vibration Suppression Function Operating Procedure 5-50
5.7.3 Related Parameters 5-53
5.8 Additional Adjustment Function 5-54
5.8.1 Switching Gain Settings 5-54
5.8.2 Manual Adjustment of Friction Compensation 5-58
5.8.3 Current Control Mode Selection Function 5-60
5.8.4 Current Gain Level Setting 5-60
5.8.5 Speed Detection Method Selection 5-60
5.8.6 Backlash Compensation Function 5-61
5.9 Compatible Adjustment Function 5-67
5.9.1 Feedforward Reference 5-67
5.9.2 Mode Switch (P/PI Switching) 5-68
5.9.3 Torque Reference Filter 5-70
5.9.4 Position Integral 5-72

Chapter 6 Utility Functions (Fn□□□) 6-1
6.1 List of Utility Functions 6-2
6.2 Alarm History Display (Fn000) 6-3
6.3 JOG Operation (Fn002) 6-4
6.4 Origin Search (Fn003) 6-6
6.5 Program JOG Operation (Fn004) 6-8
6.6 Initializing Parameter Settings (Fn005) 6-13
6.7 Clearing Alarm History (Fn006) 6-14
6.8 Offset Adjustment of Analog Monitor Output (Fn00C) 6-15
6.9 Gain Adjustment of Analog Monitor Output (Fn00D) 6-17
6.10 Automatic Offset-Signal Adjustment of the Motor Current Detection Signal (Fn00E) 6-19
6.11 Manual Offset-Signal Adjustment of the Motor Current Detection Signal (Fn00F) 6-20
6.12 Write Prohibited Setting (Fn010) 6-22
6.13 Servomotor Model Display (Fn011) 6-24
6.14 Software Version Display (Fn012) 6-25
6.15 Resetting Configuration Errors in Option Modules (Fn014) 6-26
6.16 Vibration Detection Level Initialization (Fn01B) 6-27
6.17 Display of SERVOPACK and Servomotor ID (Fn01E) 6-29
6.18 Display of Servomotor ID in Feedback Option Module (Fn01F) 6-31
6.19 Origin Setting (Fn020) 6-33
6.20 Software Reset (Fn030) 6-34
6.21 EasyFFT (Fn206) 6-35
6.22 Online Vibration Monitor (Fn207) 6-39

Chapter 7 Monitor Displays (Un□□□) 7-1
7.1 List of Monitor Displays 7-2
7.2 Viewing Monitor Displays 7-3
7.3 Monitoring Input Signals 7-4
7.3.1 Interpreting Input Signal Display Status 7-4
7.3.2 Input Signal Display Example 7-5

7.4 Monitoring Output Signals 7-6
7.4.1 Interpreting Output Signal Display Status 7-6
7.4.2 Output Signal Display Example 7-6
7.5 Monitoring Safety Input Signals 7-7
7.5.1 Interpreting Safety Input Signal Display Status 7-7
7.5.2 Safety Input Signal Display Example 7-7

Chapter 8 Fully-closed Loop Control 8-1

8.1 System Configuration and Connection Example for SERVOPACK with Fully-closed Loop Control 8-2
8.1.1 System Configuration 8-2
8.1.2 Internal Block Diagram of Fully-closed Loop Control 8-3
8.1.3 Serial Converter Unit 8-4
8.1.4 Example of Connections to External Encoders 8-6
8.1.5 Encoder Output Pulse Signals from SERVOPACK with an External Encoder by Renishaw plc 8-7
8.1.6 Precautions When Using an External Incremental Encoder by Magnescale 8-8
8.2 SERVOPACK Startup Procedure 8-11
8.3 Parameter Settings for Fully-closed Loop Control 8-13
8.3.1 Motor Rotation Direction 8-14
8.3.2 Sine Wave Pitch (Frequency) for an External Encoder 8-16
8.3.3 Setting Encoder Output Pulses (PAO, PBO, and PCO) 8-16
8.3.4 External Absolute Encoder Data Reception Sequence 8-17
8.3.5 Electronic Gear 8-20
8.3.6 Alarm Detection 8-21
8.3.7 Analog Monitor Signal 8-22
8.3.8 Speed Feedback Method during Fully-closed Loop Control 8-22

Chapter 9 Troubleshooting 9-1

9.1 Alarm Displays 9-2
9.1.1 List of Alarms 9-2
9.1.2 Troubleshooting of Alarms 9-7
9.2 Warning Displays 9-23
9.2.1 List of Warnings 9-23
9.2.2 Troubleshooting of Warnings 9-25
9.3 Monitoring Communication Data on Occurrence of an Alarm or Warning . . 9-30
9.4 Troubleshooting Malfunction Based on Operation and Conditions of the Servomotor 9-31

Chapter 10 Appendix 10-1

10.1 List of Parameters 10-2
10.1.1 Utility Functions 10-2
10.1.2 Parameters 10-3
10.1.3 MECHATROLINK-III Common Parameters 10-37
10.2 List of Monitor Displays 10-45
10.3 Parameter Recording Table 10-46

Index Index-1

Revision History

1

Outline

1.1 Σ-V Series SERVOPACKs 1-2

1.2 Part Names 1-2

1.3 SERVOPACK Ratings and Specifications 1-3

1.3.1 Ratings 1-3
1.3.2 Basic Specifications 1-5
1.3.3 MECHATROLINK-III Function Specifications 1-8

1.4 SERVOPACK Internal Block Diagrams 1-9

1.4.1 Single-phase 100 V, SGDV-R70F21A, -R90F21A, -2R1F21A Models 1-9
1.4.2 Single-phase 100 V, SGDV-2R8F21A Model 1-9
1.4.3 Single-phase 200 V, SGDV-120A21A008000 Model 1-10
1.4.4 Three-phase 200 V, SGDV-R70A21□, -R90A21□, -1R6A21□ Models 1-10
1.4.5 Three-phase 200 V, SGDV-2R8A21□ Model 1-11
1.4.6 Three-phase 200 V, SGDV-3R8A21A, -5R5A21A, -7R6A21A Models 1-11
1.4.7 Three-phase 200 V, SGDV-120A21A Model 1-12
1.4.8 Three-phase 200 V, SGDV-180A21A, -200A21A Models 1-12
1.4.9 Three-phase 200 V, SGDV-330A21A Model 1-13
1.4.10 Three-phase 200 V, SGDV-470A21A, -550A21A Models 1-13
1.4.11 Three-phase 200 V SGDV-590A21A, -780A21A Models 1-14
1.4.12 Three-phase 400 V, SGDV-1R9D21A, -3R5D21A, -5R4D21A Models 1-14
1.4.13 Three-phase 400 V, SGDV-8R4D21A, -120D21A Models 1-15
1.4.14 Three-phase 400 V, SGDV-170D21A Model 1-15
1.4.15 Three-phase 400 V, SGDV-210D21A, -260D21A Models 1-16
1.4.16 Three-phase 400 V, SGDV-280D21A, -370D21A Models 1-16

1.5 Examples of Servo System Configurations 1-17

1.5.1 Connecting to SGDV-□□□F21A SERVOPACK 1-17
1.5.2 Connecting to SGDV-□□□A21□ SERVOPACK 1-18
1.5.3 Connecting to SGDV-□□□D21A SERVOPACK 1-20

1.6 SERVOPACK Model Designation 1-21

1.7 Inspection and Maintenance 1-22

1.1 Σ-V Series SERVOPACKs

The Σ-V Series SERVOPACKs are designed for applications that require frequent high-speed, high-precision positioning. The SERVOPACK makes the most of machine performance in the shortest time possible, thus contributing to improving productivity.

1.2 Part Names

This section describes the part names of SGDV SERVOPACK for MECHATROLINK-III communications reference.

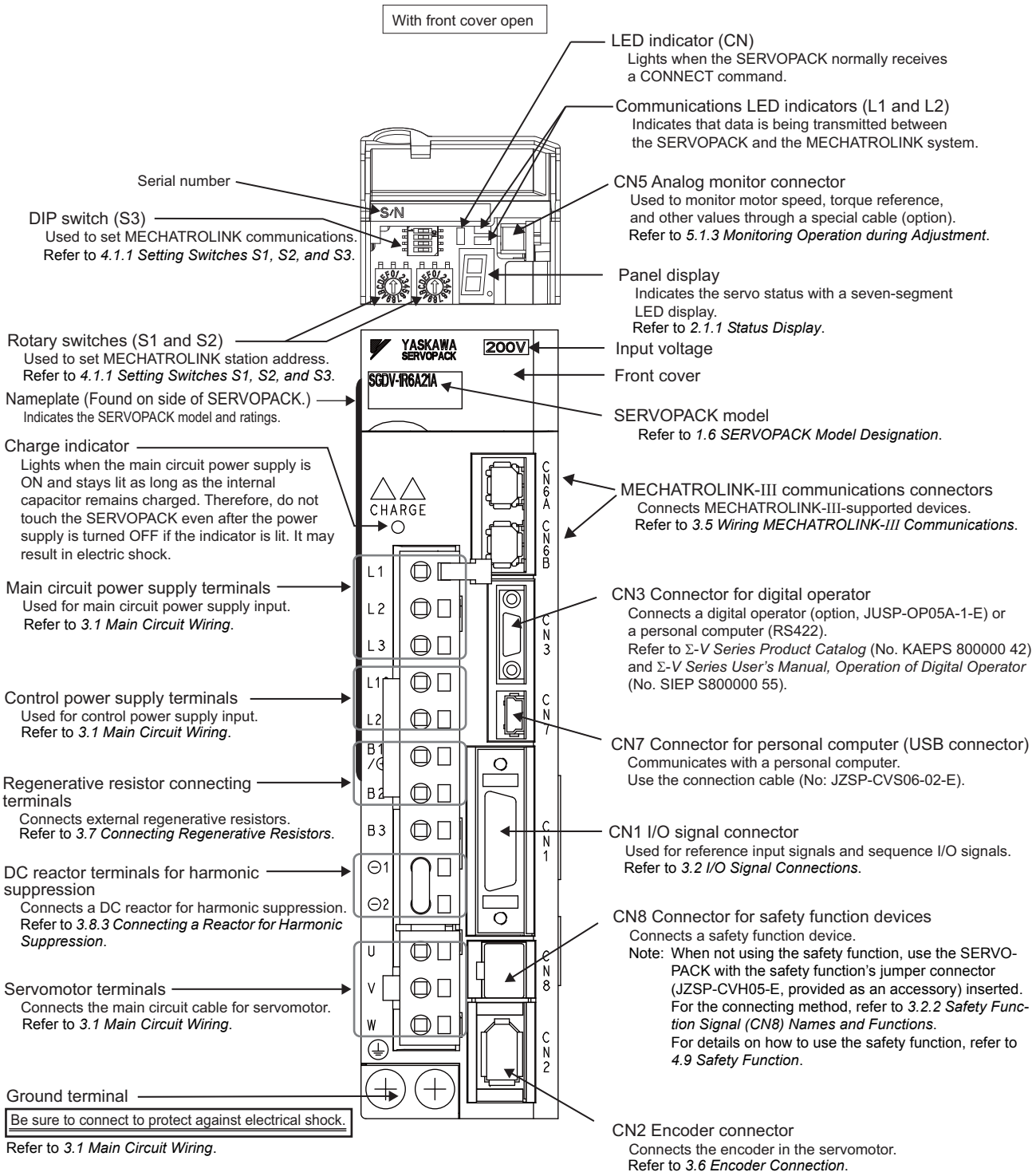

1.3 SERVOPACK Ratings and Specifications

This section describes the ratings and specifications of SERVOPACKs.

1.3.1 Ratings

Ratings of SERVOPACKs are as shown below.

(1) SGDV with Single-phase, 100-V Rating

SGDV (Single Phase, 100 V)	R70	R90	2R1	2R8
Continuous Output Current [Arms]	0.66	0.91	2.1	2.8
Instantaneous Max. Output Current [Arms]	2.1	2.9	6.5	9.3
Regenerative Resistor *	None or external			
Main Circuit Power Supply	Single-phase, 100 to 115 VAC $^{+10\%}_{-15\%}$, 50/60 Hz			
Control Power Supply	Single-phase, 100 to 115 VAC $^{+10\%}_{-15\%}$, 50/60 Hz			
Overvoltage Category	III			

∗ Refer to *3.7 Connecting Regenerative Resistors* for details.

(2) SGDV with Single-phase, 200-V Rating

SGDV (Single Phase, 200 V)	120 *1
Continuous Output Current [Arms]	11.6
Instantaneous Max. Output Current [Arms]	28
Regenerative Resistor *2	Built-in or external
Main Circuit Power Supply	Single-phase, 220 to 230 VAC $^{+10\%}_{-15\%}$, 50/60 Hz
Control Power Supply	Single-phase, 220 to 230 VAC $^{+10\%}_{-15\%}$, 50/60 Hz
Overvoltage Category	III

∗1. The official model number is SGDV-120A21A008000.
∗2. Refer to *3.7 Connecting Regenerative Resistors* for details.

(3) SGDV with Three-phase, 200-V Rating

SGDV (Three Phase, 200 V)	R70	R90	1R6	2R8	3R8	5R5	7R6	120	180	200	330	470	550	590	780
Continuous Output Current [Arms]	0.66	0.91	1.6	2.8	3.8	5.5	7.6	11.6	18.5	19.6	32.9	46.9	54.7	58.6	78.0
Instantaneous Max. Output Current [Arms]	2.1	2.9	5.8	9.3	11.0	16.9	17	28	42	56	84	110	130	140	170
Regenerative Resistor *	None or external				Built-in or external							External			
Main Circuit Power Supply	Three-phase, 200 to 230 VAC $^{+10\%}_{-15\%}$, 50/60 Hz														
Control Power Supply	Single-phase, 200 to 230 VAC $^{+10\%}_{-15\%}$, 50/60 Hz														
Overvoltage Category	III														

∗ Refer to *3.7 Connecting Regenerative Resistors* for details.

(4) SGDV with Three-phase, 400-V Rating

SGDV (Three Phase, 400 V)	1R9	3R5	5R4	8R4	120	170	210	260	280	370
Continuous Output Current [Arms]	1.9	3.5	5.4	8.4	11.9	16.5	20.8	25.7	28.1	37.2
Instantaneous Max. Output Current [Arms]	5.5	8.5	14	20	28	42	55	65	70	85
Regenerative Resistor *	Built-in or external						External			
Main Circuit Power Supply	Three-phase, 380 to 480 VAC $^{+10\%}_{-15\%}$, 50/60 Hz									
Control Power Supply	24 VDC ±15%									
Overvoltage Category	III									

* Refer to *3.7 Connecting Regenerative Resistors* for details.

1.3.2 Basic Specifications

Basic specifications of SERVOPACKs are shown below.

Drive Method			Sine-wave current drive with PWM control of IGBT	
Feedback			Encoder: 13-bit (incremental), 17-bit, 20-bit (incremental/absolute)	
Operating Conditions	Surrounding Air Temperature		0°C to +55°C	
	Storage Temperature		-20°C to +85°C	
	Ambient Humidity		90% RH or less	With no freezing or condensation
	Storage Humidity		90% RH or less	
	Vibration Resistance		4.9 m/s^2	
	Shock Resistance		19.6 m/s^2	
	Protection Class		IP10	An environment that satisfies the following conditions. • Free of corrosive or flammable gases • Free of exposure to water, oil, or chemicals • Free of dust, salts, or iron dust
	Pollution Degree		2	
	Altitude		1000 m or less	
	Others		Free of static electricity, strong electromagnetic fields, magnetic fields or exposure to radioactivity	
Harmonized Standards			UL508C EN50178, EN55011 group1 class A, EN61000-6-2, EN61800-3, EN61800-5-1, EN954-1, IEC61508-1 to 4	
Mounting			Standard: Base-mounted Optional: Rack-mounted or duct-ventilated	
Performance	Speed Control Range		1:5000 (The lower limit of the speed control range must be lower than the point at which the rated torque does not cause the servomotor to stop.)	
	Speed Regulation*1	Load Regulation	0% to 100% load: ±0.01% max. (at rated speed)	
		Voltage Regulation	Rated voltage ±10%: 0% (at rated speed)	
		Temperature Regulation	25 ± 25 °C: ±0.1% max. (at rated speed)	
	Torque Control Tolerance (Repeatability)		±1%	
	Soft Start Time Setting		0 to 10 s (Can be set individually for acceleration and deceleration.)	

(cont'd)

I/O Signals	Encoder Output Pulse		Phase A, B, C: line driver Encoder output pulse: any setting ratio (Refer to *4.4.5*.)	
	Sequence Input	Input Signals which can be allocated	Number of Channels	7 ch
			Functions	• Homing deceleration switch (/DEC) • External latch (/EXT 1 to 3) • Forward run prohibited (P-OT), reverse run prohibited (N-OT) • Forward external torque limit (/P-CL), reverse external torque limit (/N-CL) Signal allocations can be performed, and positive and negative logic can be changed.
	Sequence Output	Fixed Output	Servo alarm (ALM) output	
		Output Signals which can be allocated	Number of Channels	3 ch
			Functions	• Positioning completion (/COIN) • Speed coincidence detection (/V-CMP) • Rotation detection (/TGON) • Servo ready (/S-RDY) • Torque limit detection (/CLT) • Speed limit detection (/VLT) • Brake (/BK) • Warning (/WARN) • Near (/NEAR) Signal allocations can be performed, and positive and negative logic can be changed.
Communi-cations Function	RS422A Commu-nications (CN3)	Interface	Digital operator (JUSP-OP05A-1-E), personal computer (can be connected with SigmaWin+)	
		1:N Communica-tions	N = Up to 15 stations possible at RS422A	
		Axis Address Setting	Set by parameter	
	USB Commu-nications (CN7)	Interface	Personal computer (can be connected with SigmaWin+)	
		Communica-tions Standard	Complies with standard USB1.1. (12 Mbps)	
LED Display			Panel display (seven-segment), CHARGE, L1, L2, and CN indicators	
MECHATROLINK-III Communications Setting Switches			Rotary Switch (S1, S2)	Position: 16 positions × 2 (Refer to *4.1.1*)
			DIP Switch (S3)	Number of pins: Four pins (Refer to *4.1.1*)
Analog Monitor (CN5)			Number of points: 2 Output voltage: ± 10VDC (linearity effective range ± 8 V) Resolution: 16 bits Accuracy: ± 20 mV (Typ) Max. output current: ± 10 mA Settling time (± 1%): 1.2 ms (Typ)	
Dynamic Brake (DB)			Activated when a servo alarm or overtravelling occurs or when the power supply for the main circuit or servomotor is OFF.	
Regenerative Processing			Included *2	
Overtravel Prevention (OT)			Dynamic brake stop, deceleration to a stop, or free run to a stop at P-OT or N-OT	
Protective Function			Overcurrent, overvoltage, insufficient voltage, overload, regeneration error, and so on.	
Utility Function			Gain adjustment, alarm history, JOG operation, origin search, and so on.	

(cont'd)

Safety Function	Input	/HWBB1, /HWBB2: Baseblock signal for power module
	Output	EDM1: Monitoring status of internal safety circuit (fixed output)
	Standards *3	EN954 Category 3, IEC61508 SIL2
Option Module		Fully-closed module, safety module

∗1. Speed regulation by load regulation is defined as follows:

$$\text{Speed regulation} = \frac{\text{No-load motor speed} - \text{Total load motor speed}}{\text{Rated motor speed}} \times 100\%$$

∗2. Refer to *1.3.1 Ratings* for details on regenerative resistors.

∗3. Perform risk assessment for the system and be sure that the safety requirements are fulfilled.

1.3.3 MECHATROLINK-III Function Specifications

The following table shows the specifications of MECHATROLINK-III.

Function		Specifications
MECHATROLINK-III Communication	Communication Protocol	MECHATROLINK-III
	Station Address	03H to EFH (Max. number of stations: 62) Use the rotary switches S1 and S2 to set the station address.
	Baud Rate	100 Mpbs
	Transmission Cycle	125 µs, 250 µs, 500 µs, 750 µs, and 1.0 ms to 4.0 ms (increments of 0.5 ms)
	Number of Transmission Bytes	16, 32, or 48 bytes per station Use the DIP switch S3 to select the number of words.
Reference Method	Control Method	Position, speed, or torque control with MECHATROLINK-III communication
	Reference Input	MECHATROLINK commands (sequence, motion, data setting/reference, monitoring, or adjustment)
	Profile	MECHATROLINK-III standard servo profile MECHATROLINK-II-compatible profile

1.4 SERVOPACK Internal Block Diagrams

1.4.1 Single-phase 100 V, SGDV-R70F21A, -R90F21A, -2R1F21A Models

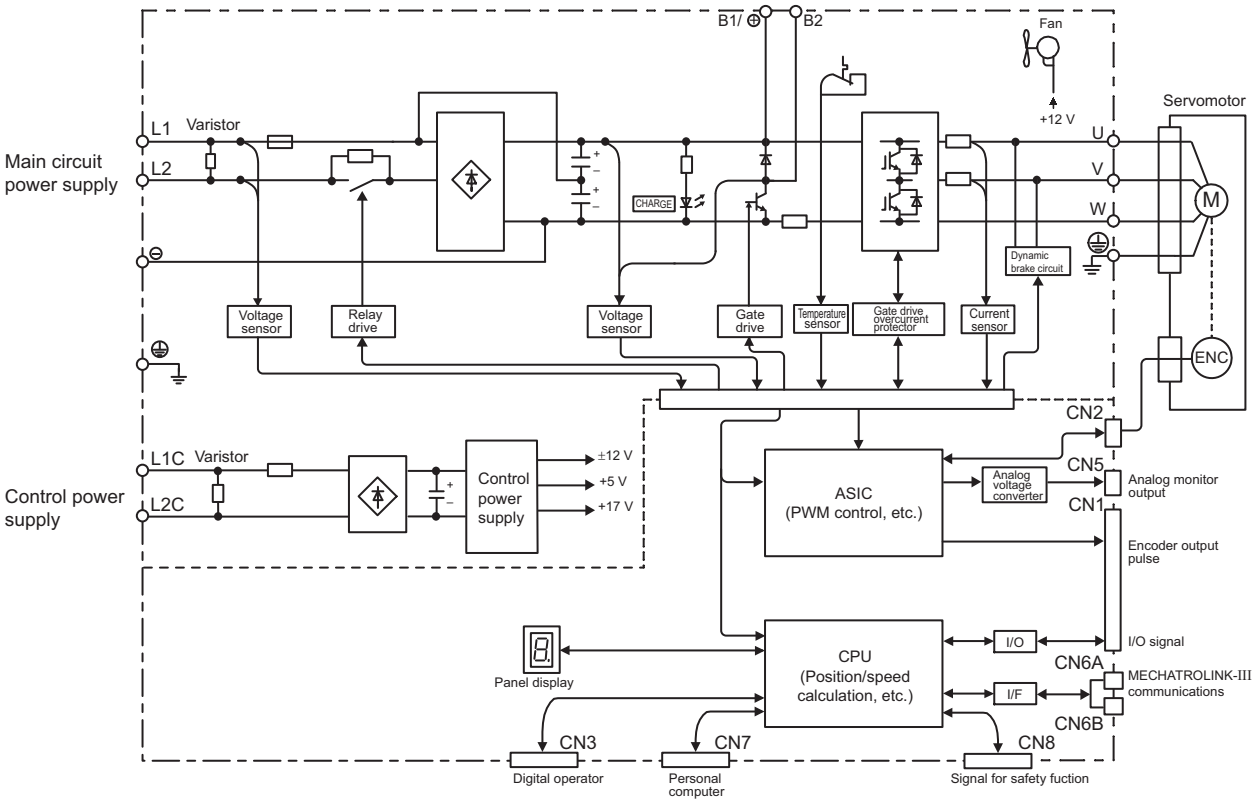

1.4.2 Single-phase 100 V, SGDV-2R8F21A Model

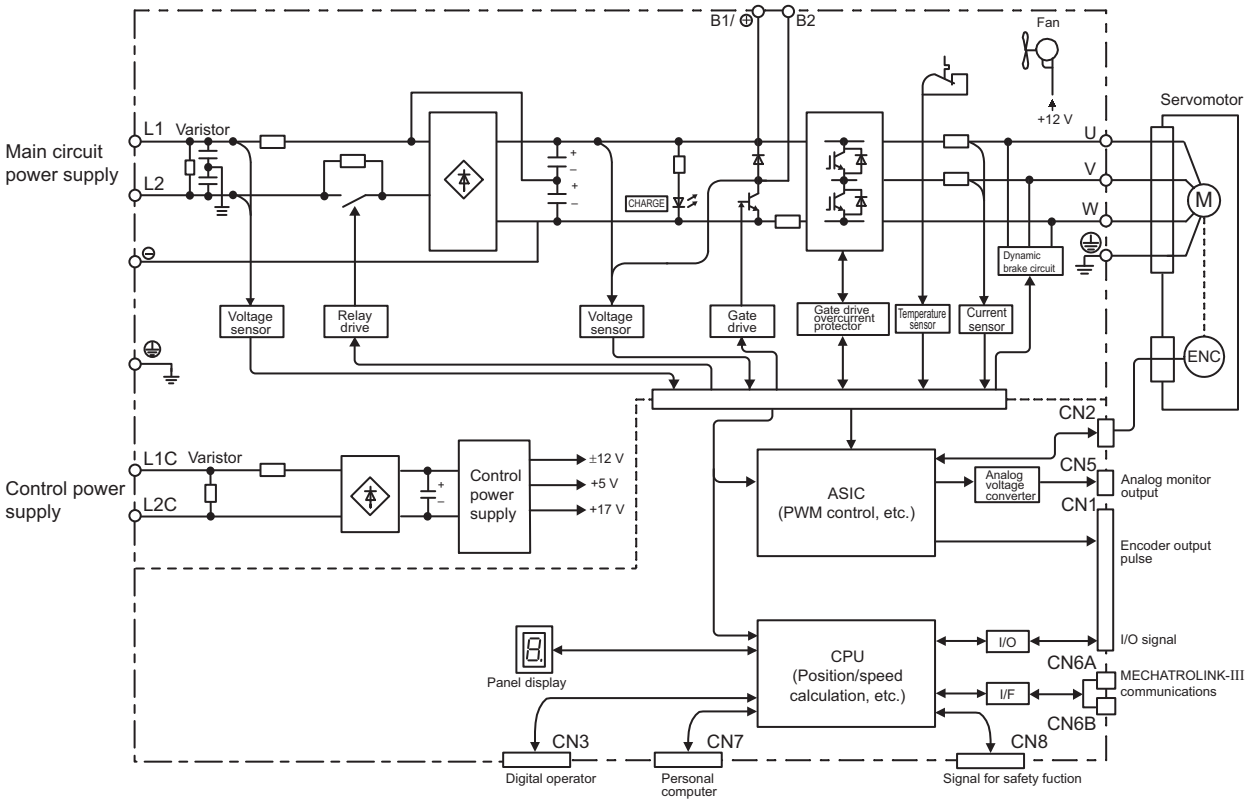

1.4.3 Single-phase 200 V, SGDV-120A21A008000 Model

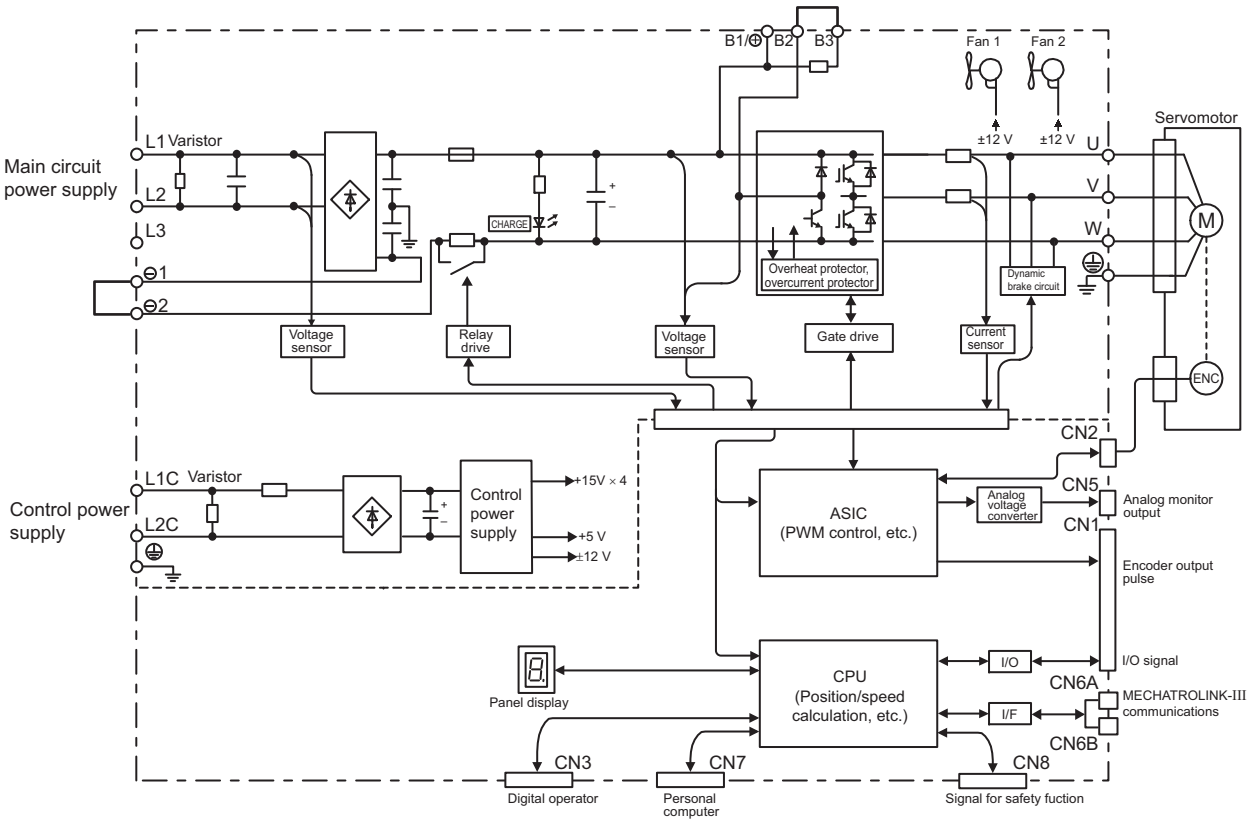

1.4.4 Three-phase 200 V, SGDV-R70A21□, -R90A21□, -1R6A21□ Models

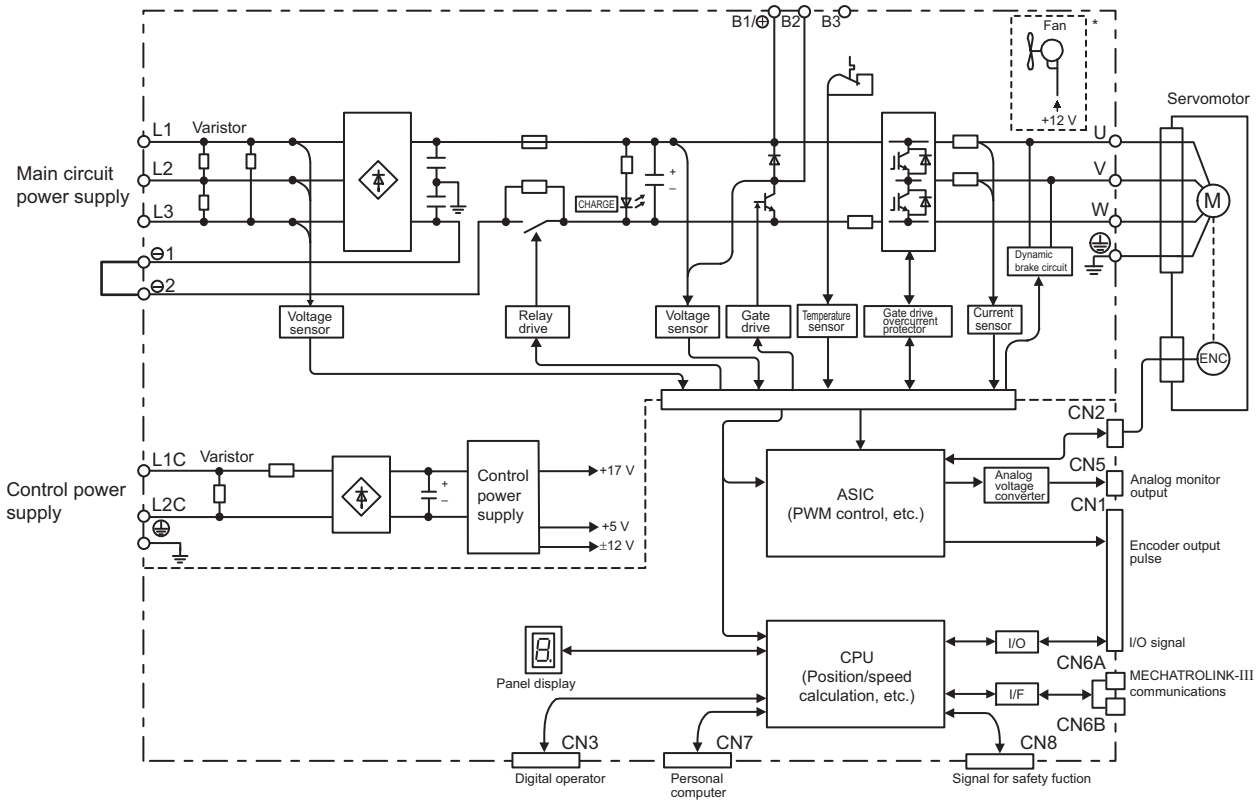

* The following SERVOPACKs do not have cooling fans: SGDV-□□□□□□B.

1.4.5 Three-phase 200 V, SGDV-2R8A21□ Model

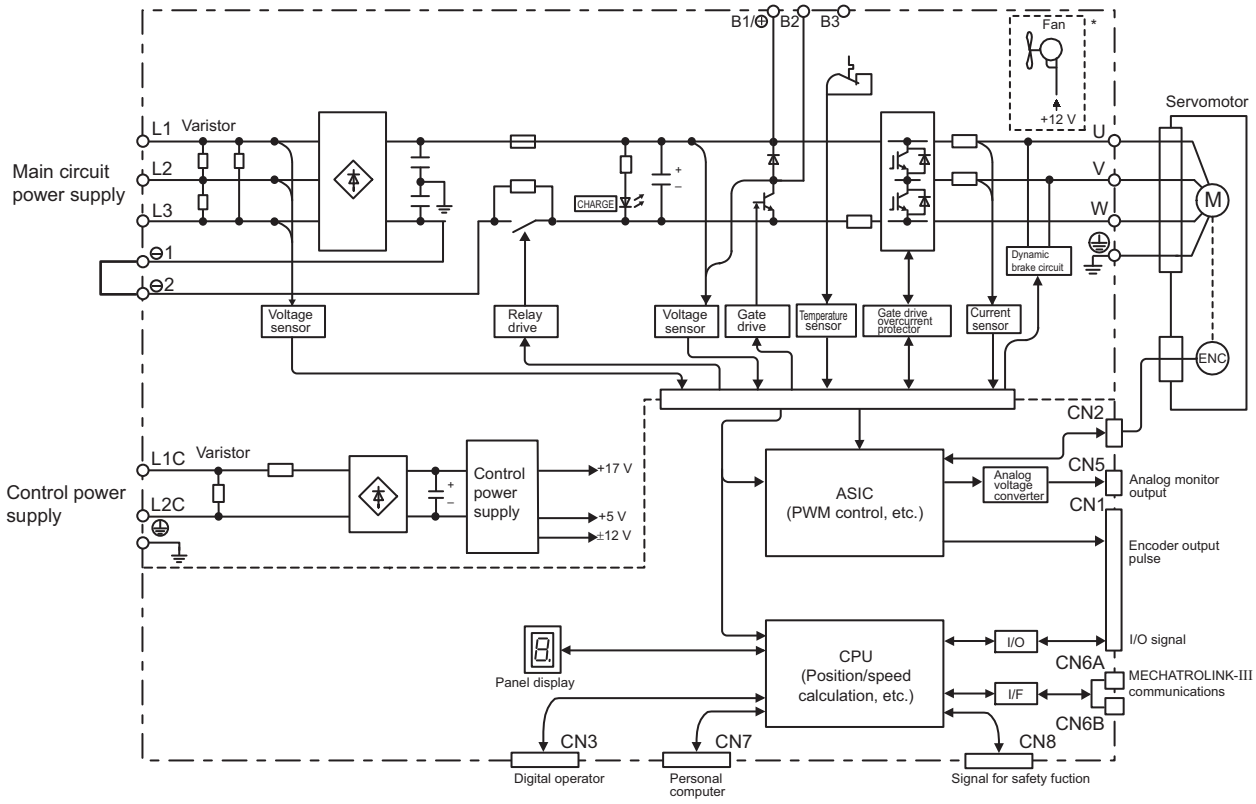

* The following SERVOPACKs do not have cooling fans: SGDV-□□□□□□B.

1.4.6 Three-phase 200 V, SGDV-3R8A21A, -5R5A21A, -7R6A21A Models

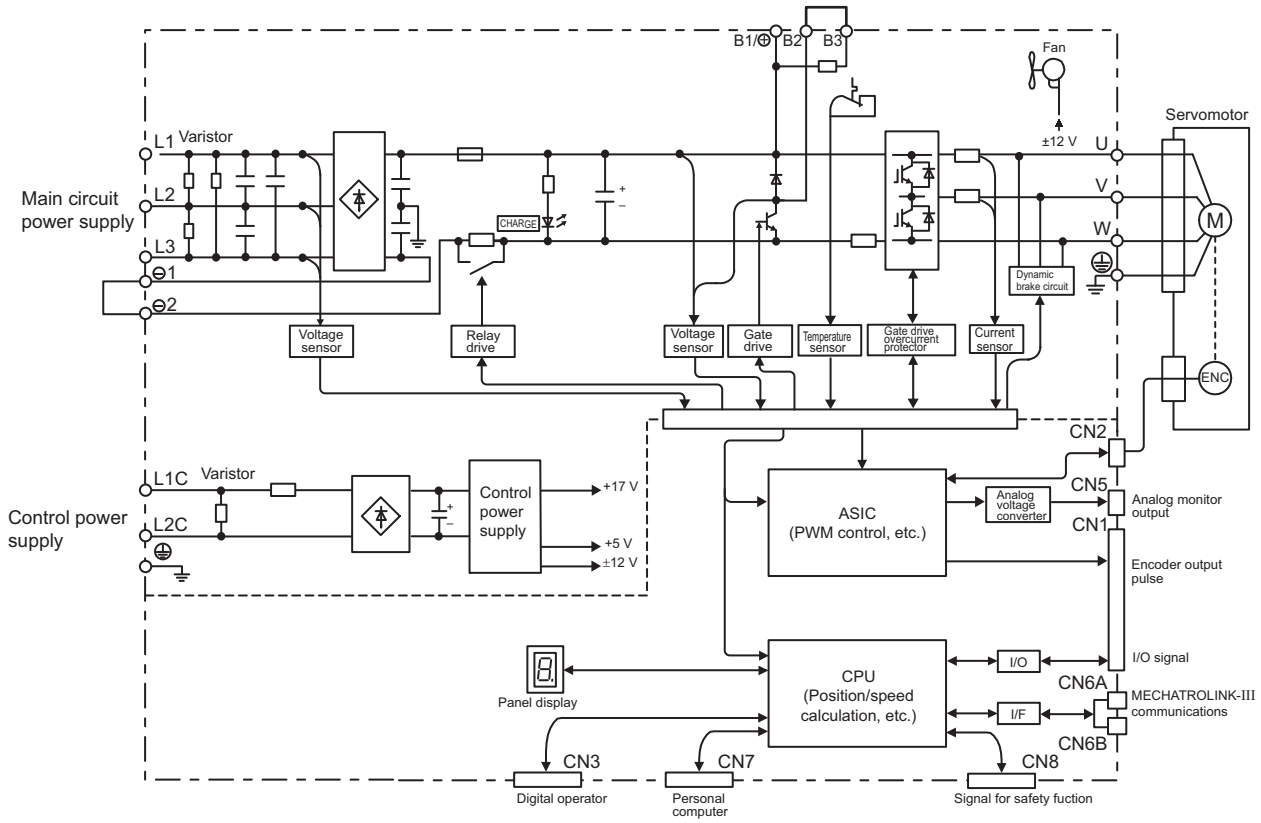

1.4.7 Three-phase 200 V, SGDV-120A21A Model

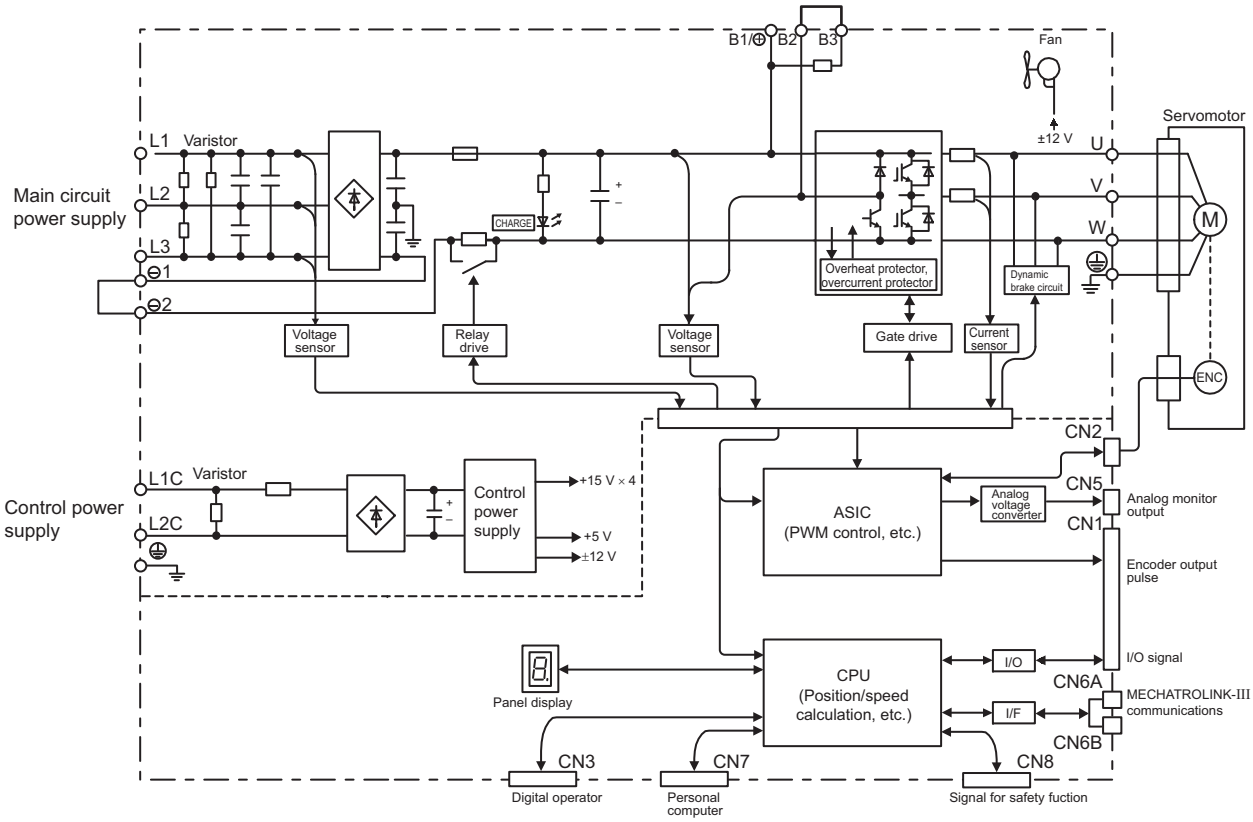

1.4.8 Three-phase 200 V, SGDV-180A21A, -200A21A Models

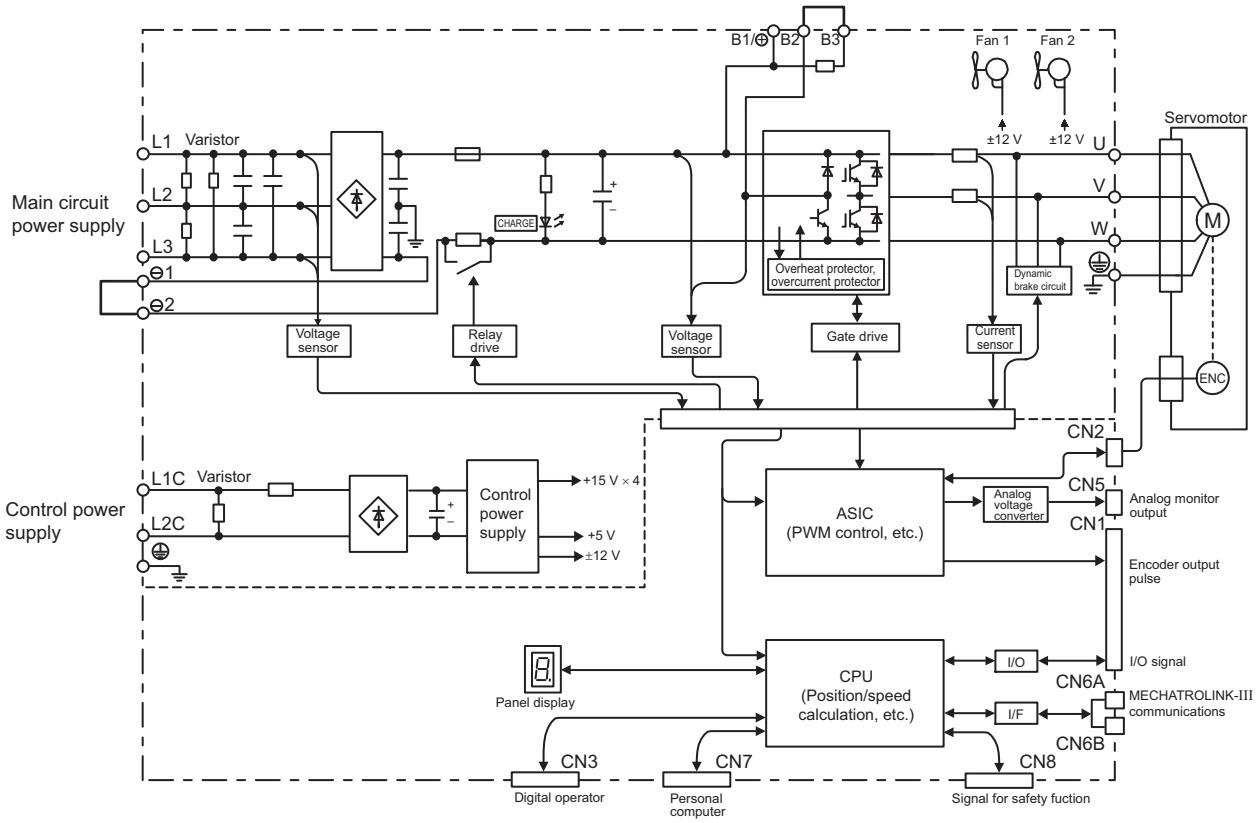

1.4.9 Three-phase 200 V, SGDV-330A21A Model

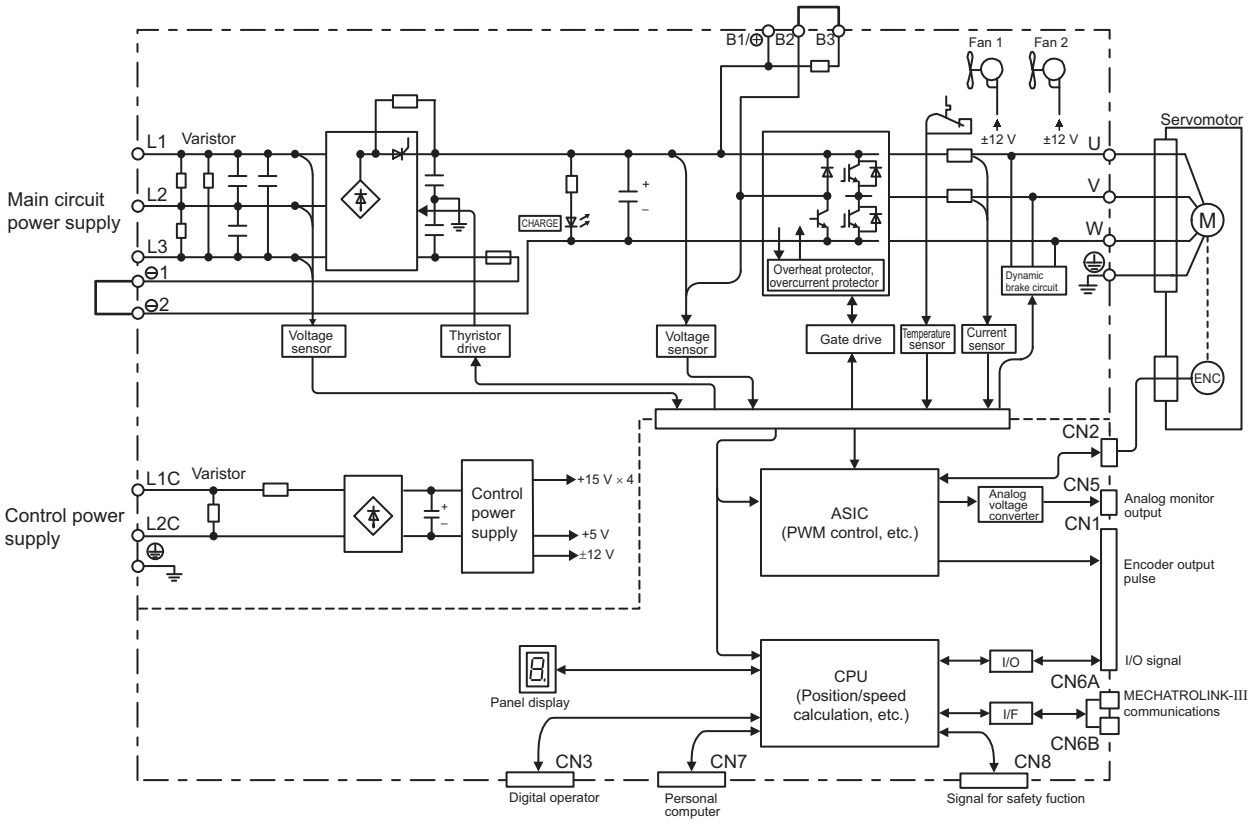

1.4.10 Three-phase 200 V, SGDV-470A21A, -550A21A Models

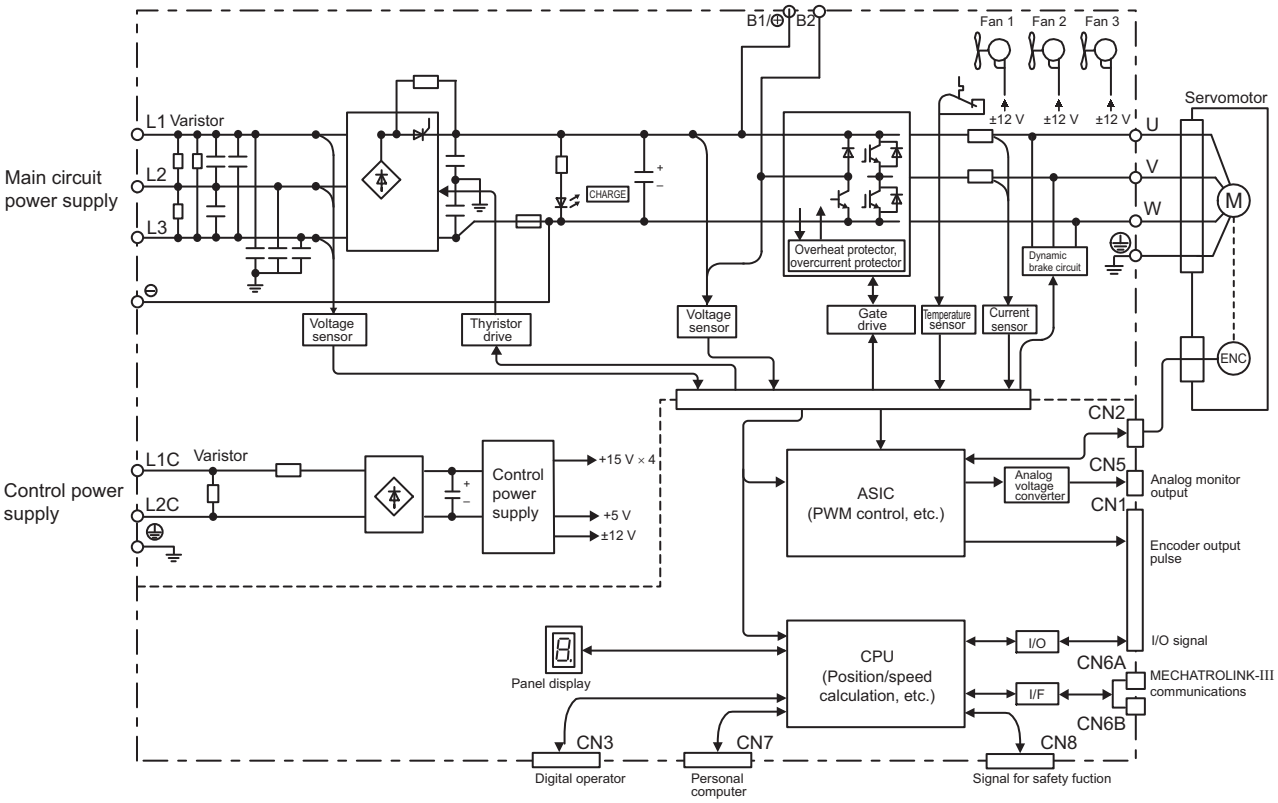

1.4.11 Three-phase 200 V SGDV-590A21A, -780A21A Models

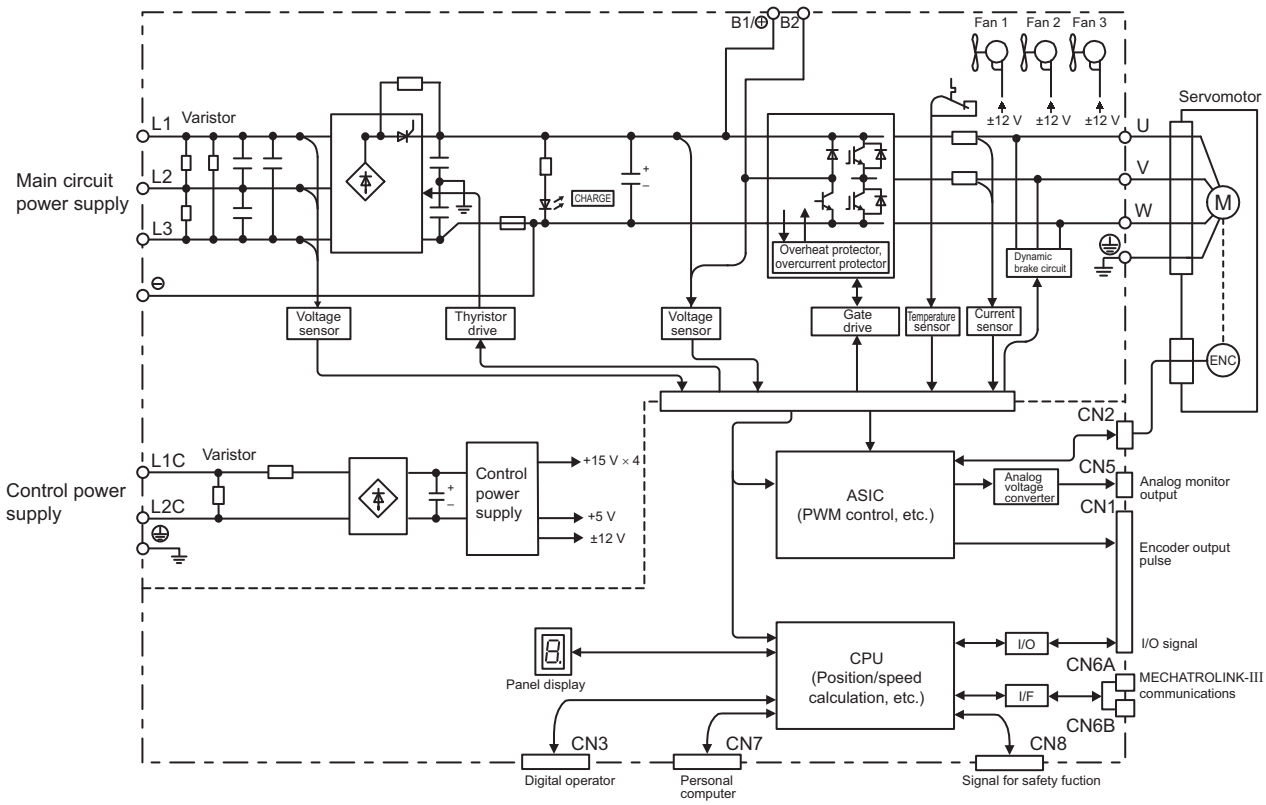

1.4.12 Three-phase 400 V, SGDV-1R9D21A, -3R5D21A, -5R4D21A Models

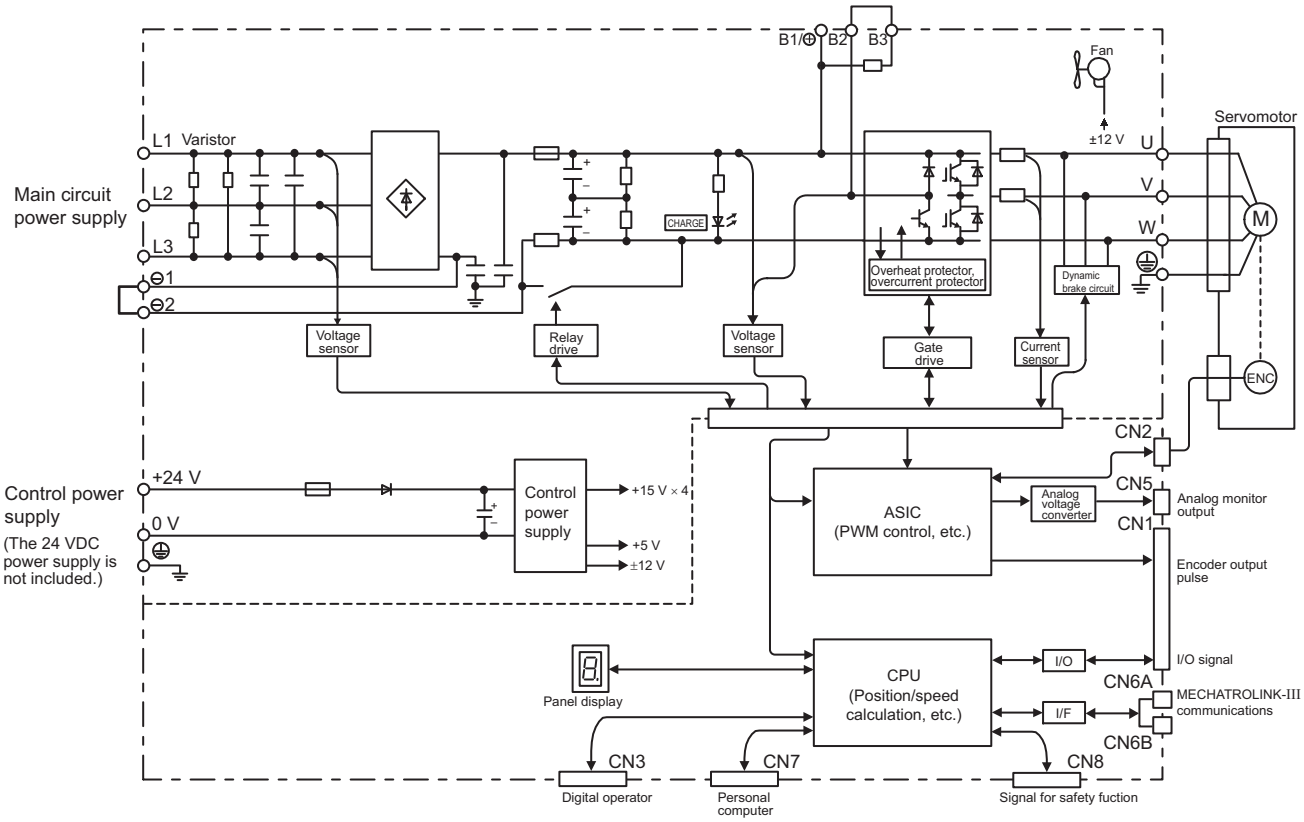

1.4.13 Three-phase 400 V, SGDV-8R4D21A, -120D21A Models

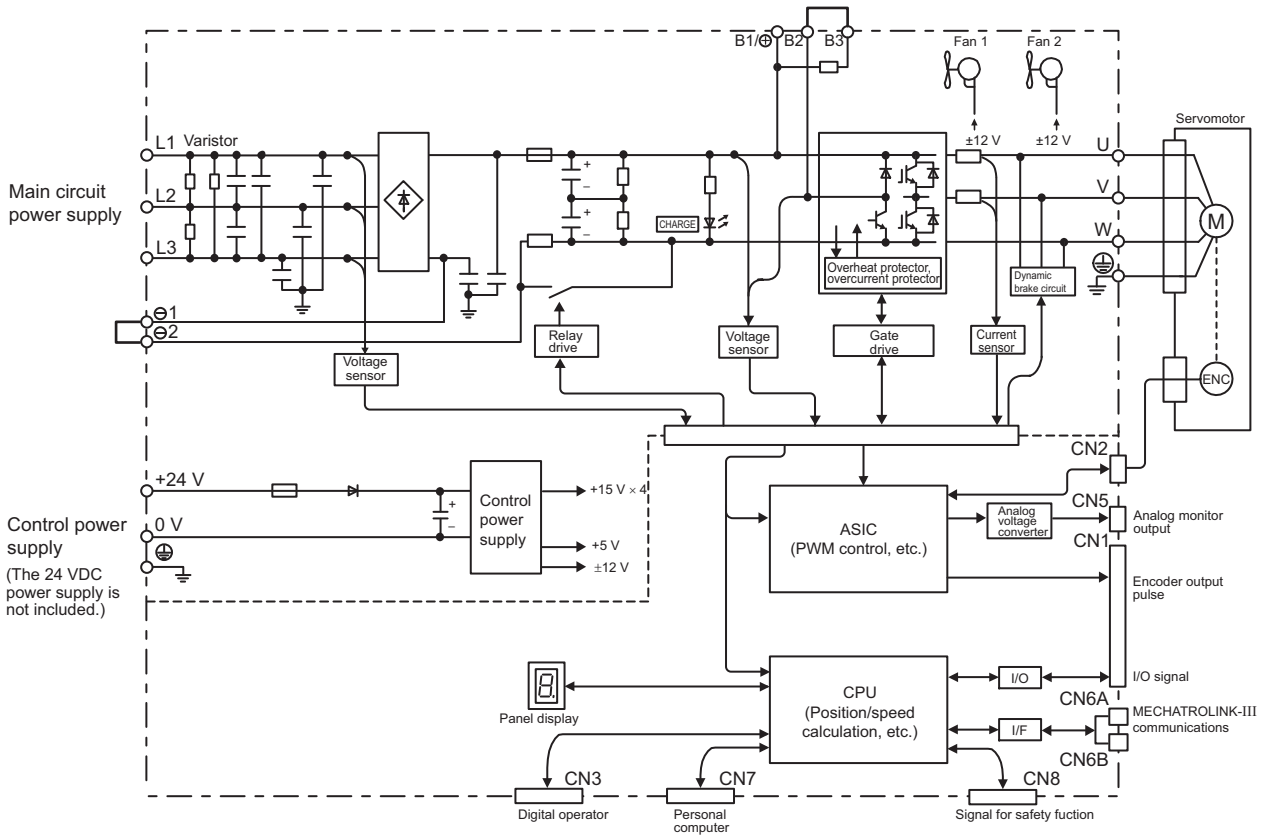

1.4.14 Three-phase 400 V, SGDV-170D21A Model

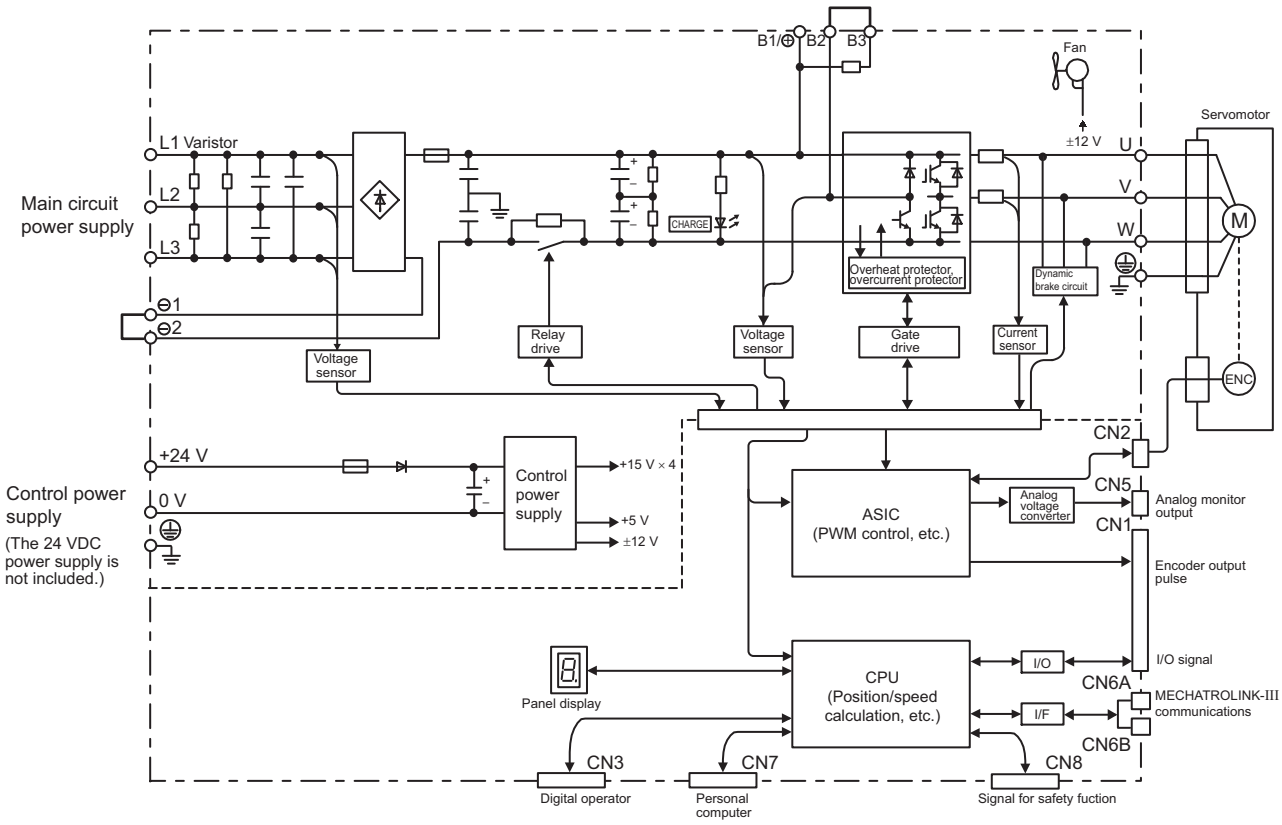

1.4.15 Three-phase 400 V, SGDV-210D21A, -260D21A Models

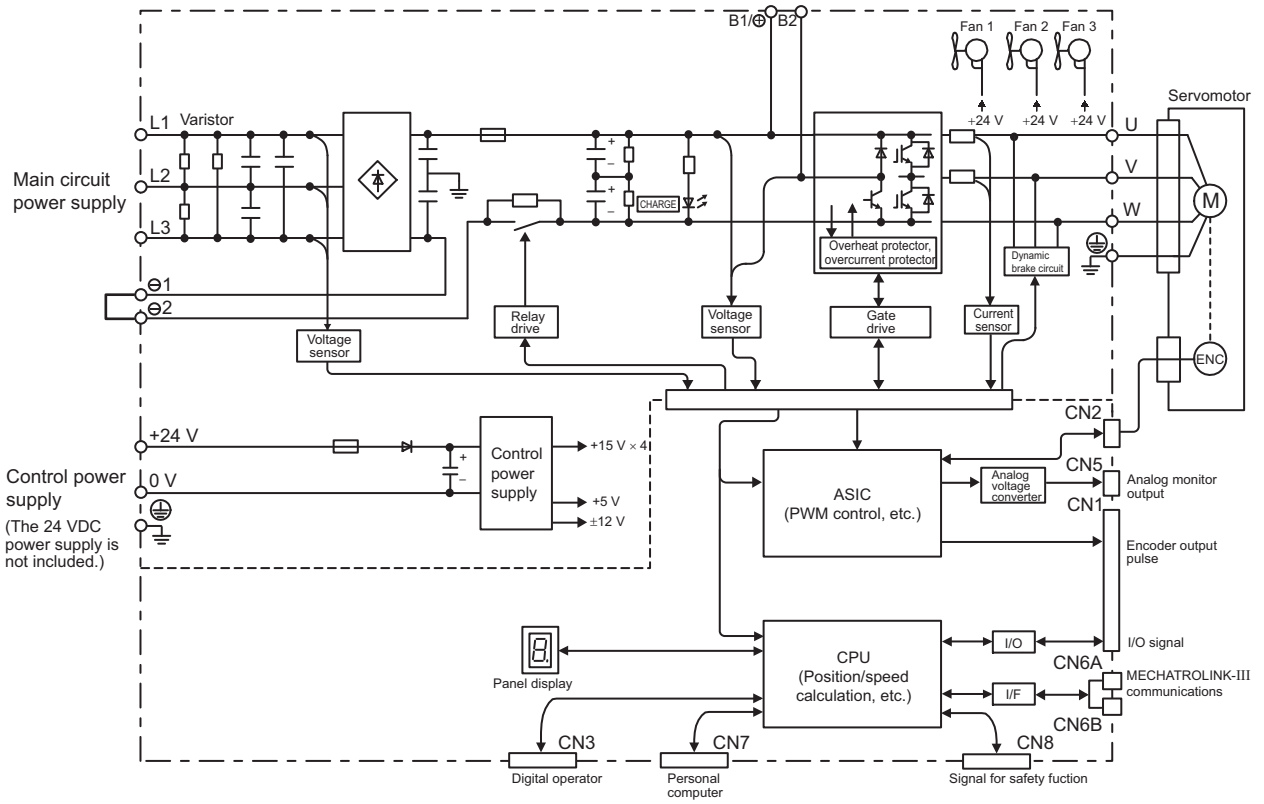

1.4.16 Three-phase 400 V, SGDV-280D21A, -370D21A Models

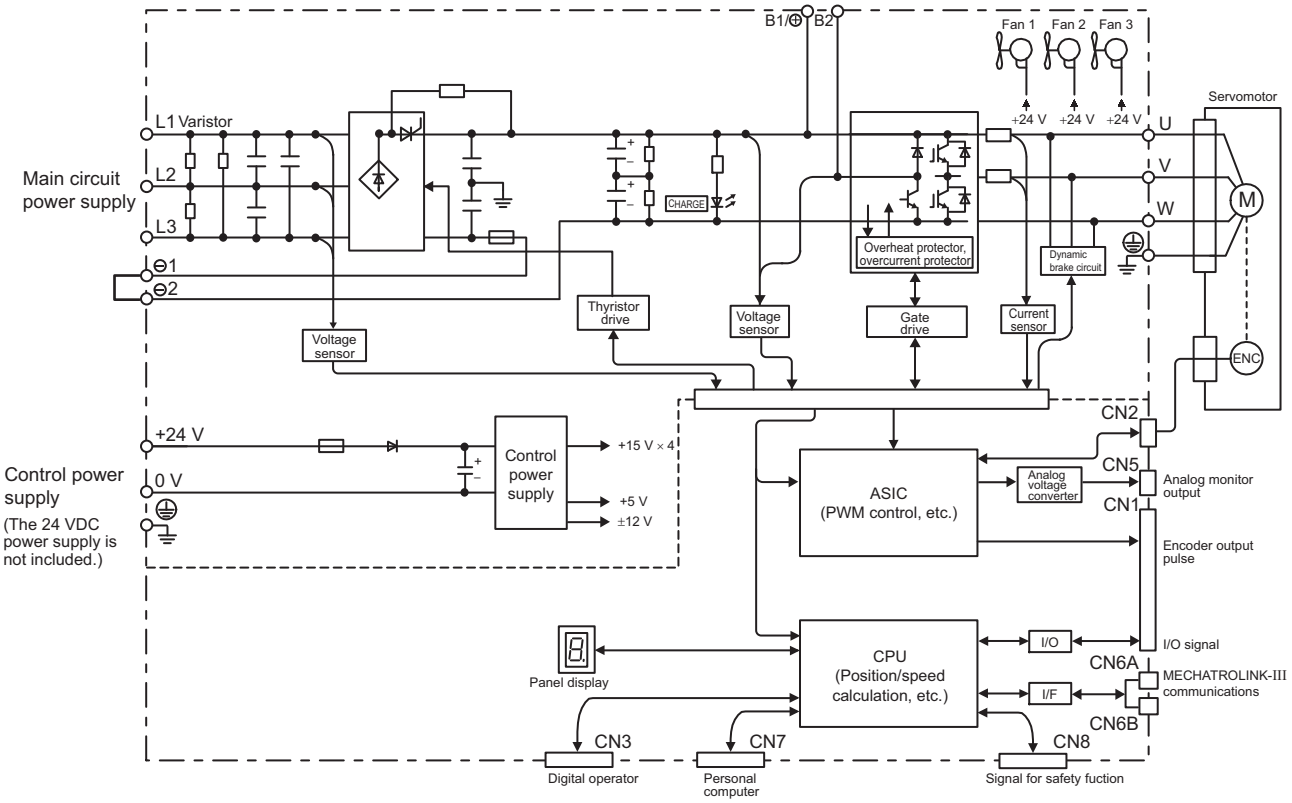

1.5 Examples of Servo System Configurations

This section describes examples of basic servo system configuration.

1.5.1 Connecting to SGDV-□□□F21A SERVOPACK

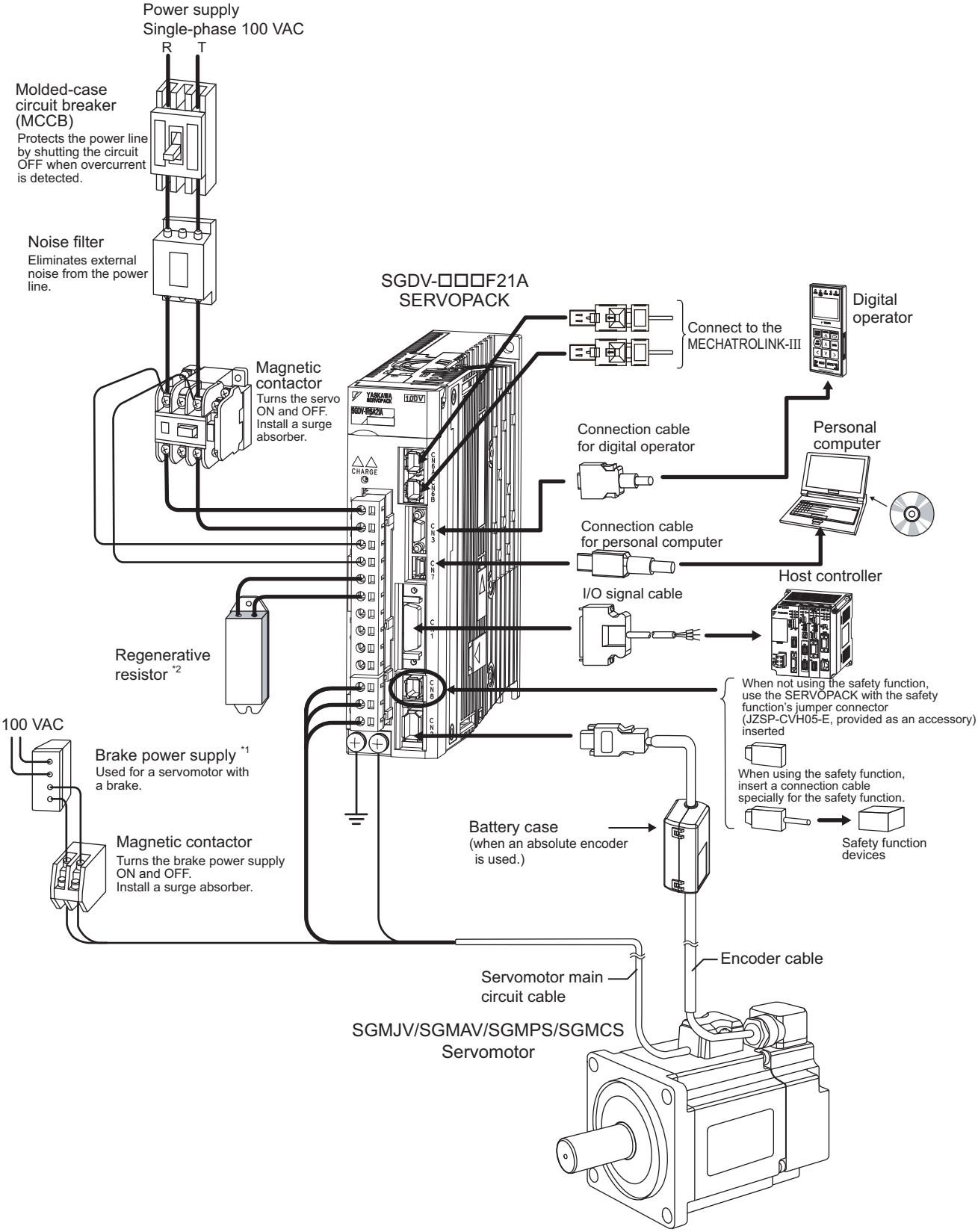

∗1. Use a 24-VDC power supply. (Not included.)
∗2. Before connecting an external regenerative resistor to the SERVOPACK, refer to *3.7 Connecting Regenerative Resistors*.

1.5.2 Connecting to SGDV-□□□A21□ SERVOPACK

(1) Using a Three-phase, 200-V Power Supply

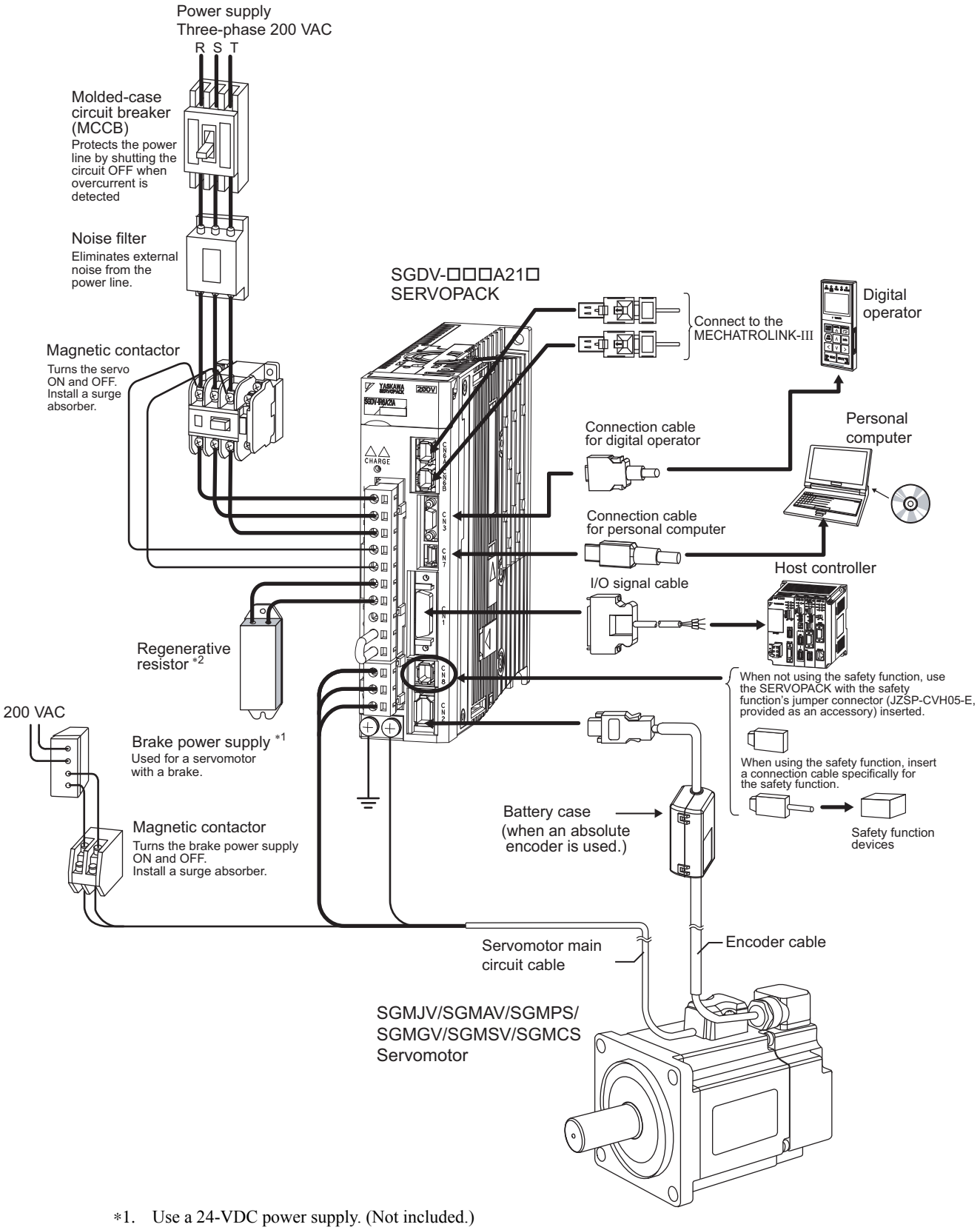

*1. Use a 24-VDC power supply. (Not included.)
If using a 90-VDC power supply for a brake, however, use one of the following power supplies.
- For 200-V input voltage: LPSE-2H01-E
- For 100-V input voltage: LPDE-1H01-E

For details, refer to *Σ-V Series Product Catalog* (No.: KAEP S800000 42).

*2. Before connecting an external regenerative resistor to the SERVOPACK, refer to *3.7 Connecting Regenerative Resistors*.

(2) Using a Single-phase, 200-V Power Supply

The Σ-V Series 200 V SERVOPACK generally specifies a three-phase power input but some models can be used with a single-phase 200 V power supply. Refer to *3.1.3 Using the SERVOPACK with Single-phase, 200 V Power Input* for details.

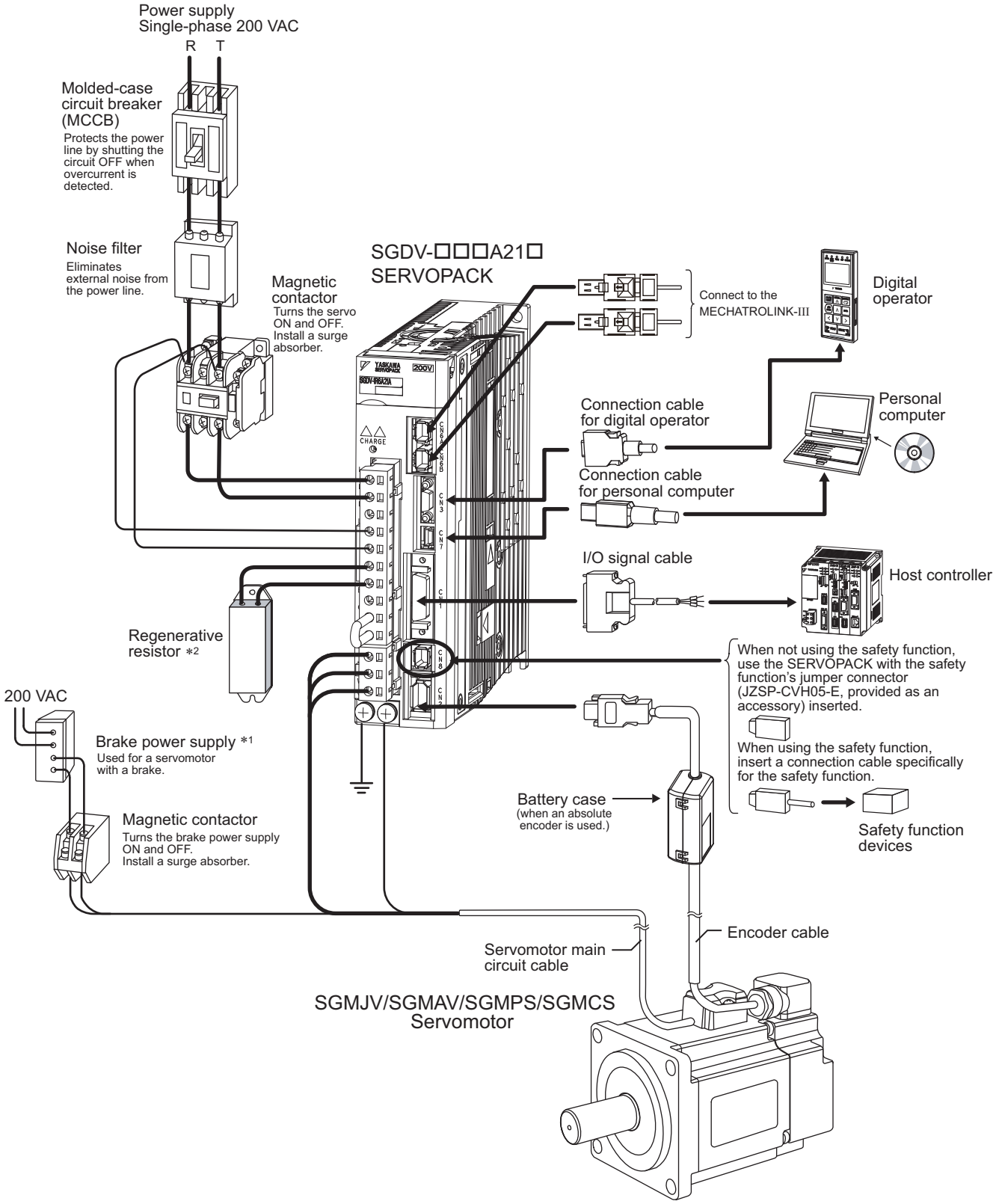

∗1. Use a 24-VDC power supply. (Not included.)
∗2. Before connecting an external regenerative resistor to the SERVOPACK, refer to *3.7 Connecting Regenerative Resistors*.

1.5.3 Connecting to SGDV-□□□D21A SERVOPACK

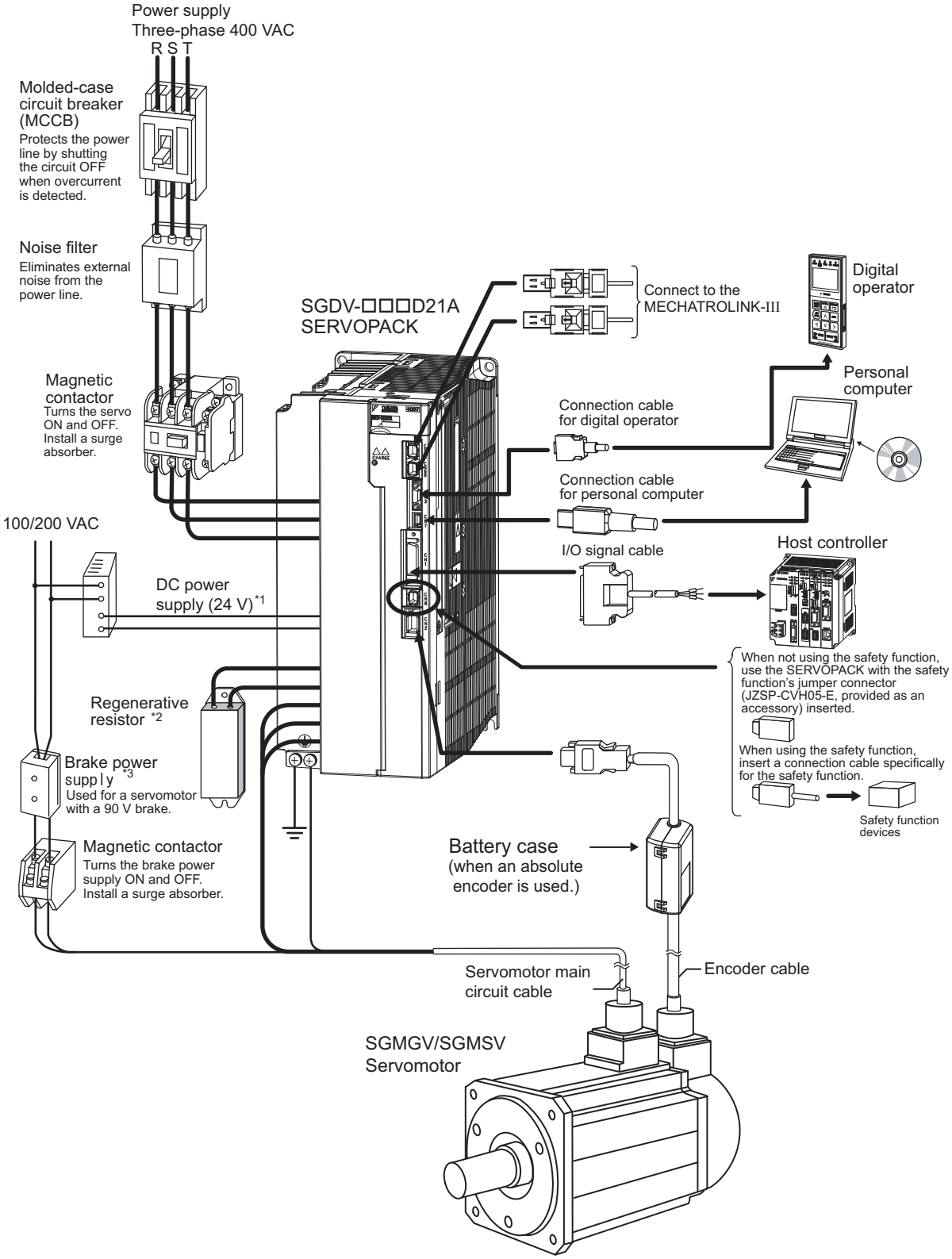

∗1. Use a 24-VDC power supply with double insulation or reinforced insulation. (The 24-VDC power supply is not included.) Do not use the same 24-VDC power supply for the brakes.

∗2. Before connecting an external regenerative resistor to the SERVOPACK, refer to *3.7 Connecting Regenerative Resistors*.

∗3. Use a 24-VDC power supply for a brake. (Not included.)
If using a 90-VDC power supply for a brake, however, use one of the following power supplies.
- For 200-V input voltage: LPSE-2H01-E
- For 100-V input voltage: LPDE-1H01-E

For details, refer to *Σ-V Series Product Catalog* (No.: KAEP S800000 42).

1.6 SERVOPACK Model Designation

This section shows SERVOPACK model designation.

1st + 2nd + 3rd digits	4th digit	5th + 6th digits	7th digit	8th + 9th + 10th digits	11th + 12th digits	13th digit
SGDV – 2R8	A	21	A	000	00	0

Series	
SGDV	Σ-V Series

7th digit: Design Revision Order

1st + 2nd + 3rd digits: Current		
Voltage	Code	Max. Allowable Motor Capacity (kW)
100 V	R70	0.05
	R90	0.1
	2R1	0.2
	2R8	0.4
200 V	R70*1	0.05
	R90*1	0.1
	1R6*1	0.2
	2R8*1	0.4
	3R8	0.5
	5R5*1	0.75
	7R6	1
	120*2	1.5
	180	2
	200	3
	330	5
	470*3	6
	550*3	7.5
	590*3	11
	780*3	15
400 V	1R9	0.5
	3R5	1
	5R4	1.5
	8R4	2
	120	3
	170	5
	210*3	6
	260*3	7.5
	280*3	11
	370*3	15

4th digit: Voltage	
Code	Voltage
F	100 V
A	200 V
D	400 V

5th + 6th digits: Interface Specifications	
Code	Interface
01	Analog voltage and pulse train reference, rotational servomotor
05	Analog voltage and pulse train reference, linear servomotor
11	MECHATROLINK-II communications reference, rotational servomotor
15	MECHATROLINK-II communications reference, linear servomotor
21	MECHATROLINK-III communications reference, rotational servomotor
25	MECHATROLINK-III communications reference, linear servomotor

8th + 9th + 10th digits: Hardware Specifications	
Code	Specifications
000	Base-mounted (standard)
001	Rack-mounted*3
002	Varnished
003	Rack-mounted*3 and Varnished
008	Single-phase, 200-V Power Supply (SGDV-120A□1A008000)
020	Dynamic brake (DB)*4

11th + 12th digits: Software Specification	
Code	Specification
00	Standard

13th digit: Parameter Specification	
Code	Specification
0	Standard

*1. These amplifiers can be powered with single or three-phase.
*2. SGDV-120A□1A008000, a special version of the 1.5 kW amplifier can be used for single-phase operation.
*3. SGDV-470A, -550A, -590A, -780A, -210D, -260D, -280D, and -370D are duct-ventilated types.
*4. A resistor for the dynamic brake is not included. An external resistor for the dynamic brake can only be used with 400-V SERVOPACKs.

Note: If the option codes digits 8 to 13 are all zeros, they are omitted.

1.7 Inspection and Maintenance

This section describes the inspection and maintenance of SERVOPACK.

(1) SERVOPACK Inspection

For inspection and maintenance of the SERVOPACK, follow the inspection procedures in the following table at least once every year. Other routine inspections are not required.

Item	Frequency	Procedure	Comments
Exterior	At least once a year	Check for dust, dirt, and oil on the surfaces.	Clean with compressed air.
Loose Screws		Check for loose terminal block and connector screws.	Tighten any loose screws.

(2) SERVOPACK's Parts Replacement Schedule

The following electric or electronic parts are subject to mechanical wear or deterioration over time. To avoid failure, replace these parts at the frequency indicated.

Refer to the standard replacement period in the following table and contact your Yaskawa representative. After an examination of the part in question, we will determine whether the parts should be replaced or not.

IMPORTANT

The parameters of any SERVOPACKs overhauled by Yaskawa are reset to the factory settings before shipping. Be sure to confirm that the parameters are properly set before starting operation.

Part	Standard Replacement Period	Operating Conditions
Cooling Fan	4 to 5 years	• Surrounding Air Temperature: Annual average of 30°C • Load Factor: 80% max. • Operation Rate: 20 hours/day max.
Smoothing Capacitor	7 to 8 years	
Other Aluminum Electrolytic Capacitor	5 years	
Relays	–	
Fuses	10 years	

2

Panel Display and Operation of Digital Operator

2.1 Panel Display 2-2
2.1.1 Status Display 2-2
2.1.2 Alarm and Warning Display 2-2
2.1.3 Hard Wire Base Block Display 2-2
2.1.4 Overtravel Display 2-2
2.2 Operation of Digital Operator 2-3
2.3 Utility Functions (Fn□□□) 2-3
2.4 Parameters (Pn□□□) 2-4
2.4.1 Parameter Classification 2-4
2.4.2 Notation for Parameters 2-4
2.4.3 Setting Parameters 2-5
2.5 Monitor Displays (Un□□□) 2-7

2.1 Panel Display

The servo status can be checked on the panel display of the SERVOPACK.
Also, if an alarm or warning occurs, its alarm or warning number is displayed.

2.1.1 Status Display

The display shows the following status.

Display	Meaning
	Rotation Detection (/TGON) Lights if motor speed exceeds the value set in Pn502. (Factory setting: 20 min^{-1})
	Baseblock Lights for baseblock (Servomotor power OFF).
	Reference Input Lights when a reference is being input.
	Control Power Supply ON Lights when the control power is being supplied.

2.1.2 Alarm and Warning Display

If an alarm or warning occurs, the display will change in the following order.

Example: Alarm A.E60

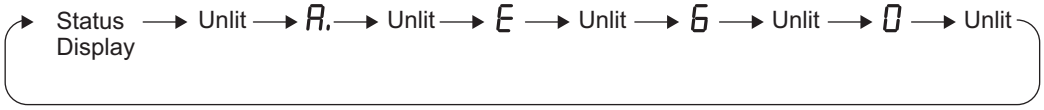

2.1.3 Hard Wire Base Block Display

If a hard wire base block (HWBB) occurs, the display will change in the following order.

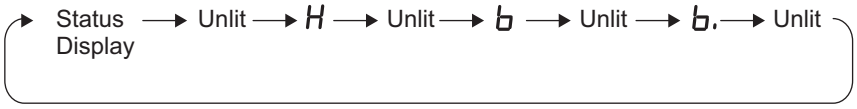

2.1.4 Overtravel Display

If overtravelling occurs, the display will change in the following order.

① Overtravel at forward rotation (P-OT)

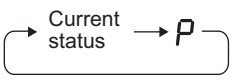

② Overtravel at reverse rotation (N-OT)

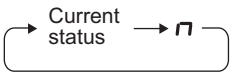

③ Overtravel at forward/reverse rotation

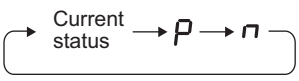

2.2 Operation of Digital Operator

Operation examples of utility functions (Fn□□□), parameters (Pn□□□) and monitor displays (Un□□□) when using a digital operator are described in this chapter.

Operations can be also performed with SigmaWin+.

For more information on the usage of the digital operator, refer to *Σ-V Series USER'S MANUAL Operation of Digital Operator* (No.: SIEP S800000 55).

2.3 Utility Functions (Fn□□□)

The utility functions are related to the setup and adjustment of the SERVOPACK.

The digital operator shows numbers beginning with Fn.
The following table outlines the procedures necessary for an origin search (Fn003).

Step	Display after Operation	Keys	Operation
1	BB –FUNCTION– Fn002:JOG Fn003:Z-Search Fn004:Program JOG Fn005:Prm Init	MODE/SET ∧ ∨	Press the MODE/SET Key to view the main menu for the utility function. Use the ∧ or ∨ Key to move through the list and select Fn003.
2	BB –Z-Search– Un000= 00000 Un002= 00000 Un003= 0000000774 Un00D= 0000000000	DATA	Press the DATA Key. The display changes to the Fn003 execution display.
3	RUN –Z-Search– Un000= 00000 Un002= 00000 Un003= 0000000774 Un00D= 0000000000	JOG SVON	Press the JOG SVON Key. The status display changes from "BB" to "RUN", and the servomotor power turns ON. Note: If the servomotor is already at the zero position, "-Complete-" is displayed.
4	RUN –Complete– Un000= 00000 Un002= 00000 Un003= 0000000000 Un00D= 0000001D58	∧ ∨	Pressing the ∧ Key will rotate the servomotor in the forward direction. Pressing the ∨ Key will rotate the servomotor in the reverse direction. The rotation direction of the servomotor changes according to the setting of Pn000.0 as shown in the following table. Parameter: Pn000 n.□□□0 — ∧ key: CCW, ∨ key: CW; Pn000 n.□□□1 — ∧ key: CW, ∨ key: CCW Note: Direction when viewed from the load of the servomotor. Press the ∧ or ∨ Key until the servomotor stops. If the origin search completed normally, "-Complete-" is displayed on the right top on the screen.
5	BB –Z-Search– Un000= 00000 Un002= 00000 Un003= 0000000000 Un00D= 0000001D58	JOG SVON	When the origin search is completed, press the JOG SVON Key. The status display changes from "RUN" to "BB", and the servomotor turns OFF. The display "-Complete-" changes to "-Z-Search-."
6	BB –FUNCTION– Fn002:JOG Fn003:Z-Search Fn004:Program JOG Fn005:Prm Init	MODE/SET	Press the MODE/SET Key. The display returns to the main menu of the utility function.
7	To enable the change in the setting, turn the power OFF and ON again.		

2.4 Parameters (Pn□□□)

This section describes the classifications, methods of notation, and settings for parameters given in this manual.

2.4.1 Parameter Classification

Parameters of the Σ-V Series SERVOPACK are classified into two types of parameters. One type of parameters is required for setting up the basic conditions for operation and the other type is required for tuning parameters that are required to adjust servomotor characteristics.

Classification	Meaning	Display Method	Setting Method
Setup Parameters	Parameters required for setup.	Always displayed (Factory setting: Pn00B.0 = 0)	Set each parameter individually.
Tuning Parameters	Parameters for tuning control gain and other parameters.	Set Pn00B.0 to 1.	There is no need to set each parameter individually.

There are two types of notation used for parameters, one for parameter that requires a value setting (parameter for numeric settings) and one for parameter that requires the selection of a function (parameter for selecting functions).

The notation and settings for both types of parameters are described next.

2.4.2 Notation for Parameters

(1) Parameters for Numeric Settings

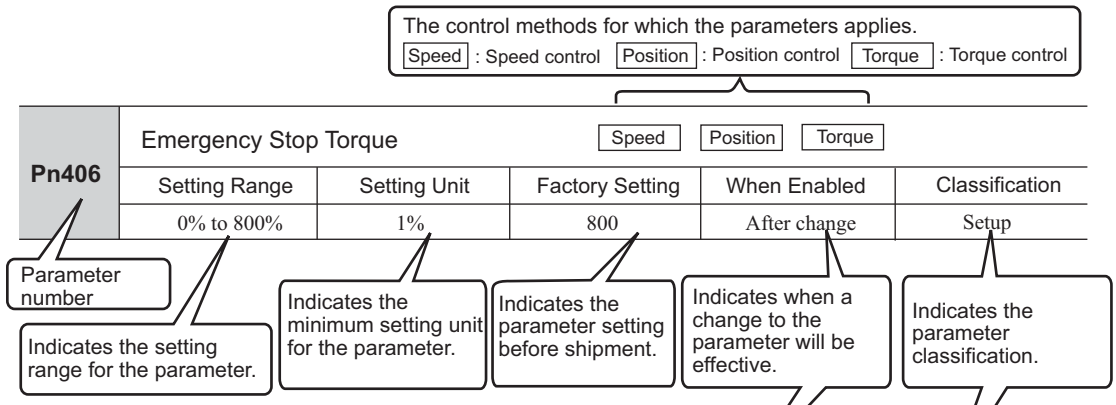

(2) Parameters for Selecting Functions

Parameter		Meaning	When Enabled	Classification
Pn002	n.□0□□ [Factory setting]	Uses the absolute encoder as an absolute encoder.	After restart	Setup
	n.□1□□	Uses the absolute encoder as an incremental encoder.		

Parameter number

The notation "n.□□□□" indicates a parameter for selecting functions. Each □ corresponds to the setting value of that digit. The notation shown here means that the third digit is 1.

This section explains the selections for the function.

- Notation Example

Digital Operator Display (Display Example for Pn002)

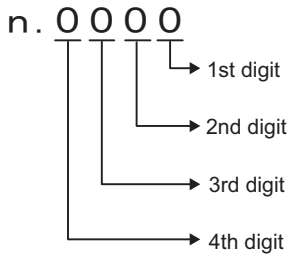

Digit Notation		Setting Notation	
Notation	Meaning	Notation	Meaning
Pn002.0	Indicates the value for the 1st digit of parameter Pn002.	Pn002.0 = x or n.□□□x	Indicates that the value for the 1st digit of parameter Pn002 is x.
Pn002.1	Indicates the value for the 2nd digit of parameter Pn002.	Pn002.1 = x or n.□□x□	Indicates that the value for the 2nd digit of parameter Pn002 is x.
Pn002.2	Indicates the value for the 3rd digit of parameter Pn002.	Pn002.2 = x or n.□x□□	Indicates that the value for the 3rd digit of parameter Pn002 is x.
Pn002.3	Indicates the value for the 4th digit of parameter Pn002.	Pn002.3 = x or n.x□□□	Indicates that the value for the 4th digit of parameter Pn002 is x.

2.4.3 Setting Parameters

(1) How to Make Numeric Settings Using Parameters

The following example shows how to change the setting of parameter Pn304 (JOG speed) to 1000 min^{-1}.

Step	Display after Operation	Keys	Operation
1	BB −PRM/MON− Un000= 00000 Un002= 00000 Un008= 00000 Un00D=00000000	MODE/SET	Press the MODE/SET Key to select the main menu of parameters and monitor displays.
2	BB −PRM/MON− Un000= 00000 Un002= 00000 Un008= 00000 Un00D=00000000	< >	Press the < or > Key to move the cursor to "Un."
3	BB −PRM/MON− Pn000=n.0000 Un002= 00000 Un008= 00000 Un00D=00000000	∧ ∨	Press the ∧ or ∨ Key to change "Un" to "Pn."
4	BB −PRM/MON− Pn000=n.0000 Un002= 00000 Un008= 00000pulse Un00D=00000000	>	Press the > Key to move the cursor to the column on the right of "Pn."
5	BB −PRM/MON− Pn304=00500 Un002= 00000 Un008= 00000 Un00D=00000000	< > ∧ ∨	Press the arrow keys to display "Pn304". To move the cursor to different columns: <, > Key To change the settings: ∧, ∨ Key
6	BB −PRM/MON− Pn304=00500 Un002= 00000 Un008= 00000 Un00D=00000000	DATA	Press the DATA Key to move the cursor to the one's place of Pn304.
7	BB −PRM/MON− Pn304=00500 Un002= 00000 Un008= 00000 Un00D=00000000	<	Press the < Key twice to move the cursor to the hundred's place of Pn304.
8	BB −PRM/MON− Pn304=01000 Un002= 00000 Un008= 00000 Un00D=00000000	∧	Press the ∧ Key five times to change the setting to "1000."

(cont'd)

Step	Display after Operation	Keys	Operation
9	BB −PRM/MON− Pn304=01000 Un002= 00000 Un008= 00000 Un00D=00000000	DATA	Press the DATA Key to write the settings.

(2) How to Select Functions Using Parameters

The following example shows how to set the function section for insufficient voltage of the application function select switch 8 (Pn008) to 1 "detects warning and limits torque by host controller."

Step	Display after Operation	Keys	Operation
1	BB −PRM/MON− Un000= 00000 Un002= 00000 Un008= 00000 Un00D=00000000	MODE/SET	Press the MODE/SET Key to select the main menu of parameters and monitor displays.
2	BB −PRM/MON− Un000= 00000 Un002= 00000 Un008= 00000 Un00D=00000000	< >	Press the < or > Key to move the cursor to "Un."
3	BB −PRM/MON− Pn000=n.0000 Un002= 00000 Un008= 00000 Un00D=00000000	∧ ∨	Press the ∧ or ∨ Key to change "Un" to "Pn."
4	BB −PRM/MON− Pn000=n.0000 Un002= 00000 Un008= 00000 Un00D=00000000	>	Press the > Key three times to move the cursor to the column on the right of "Pn."
5	BB −PRM/MON− Pn008=n.4000 Un002= 00000 Un008= 00000 Un00D=00000000	∧	Press the ∧ Key to display "Pn008."
6	BB −PRM/MON− Pn008=n.4000 Un002= 00000 Un008= 00000 Un00D=00000000	DATA	Press the DATA Key to move the cursor to "Pn008.0."
7	BB −PRM/MON− Pn008=n.4000 Un002= 00000 Un008= 00000 Un00D=00000000	<	Press the < Key once to move the cursor to "Pn008.1."
8	BB −PRM/MON− Pn008=n.4010 Un002= 00000 Un008= 00000 Un00D=00000000	∧	Press the ∧ Key to change the setting of "Pn008.1" to "1."
9	BB −PRM/MON− Pn008=n.4010 Un002= 00000 Un008= 00000 Un00D=00000000	DATA	Press the DATA Key to write the settings.

2.5 Monitor Displays (Un□□□)

The monitor displays can be used for monitoring the reference values, I/O signal status, and SERVOPACK internal status.

For details, refer to *7.2 Viewing Monitor Displays*.

The digital operator shows numbers beginning with Un.

The following four settings are the factory settings.

```
BB              －PRM／MON－
Un000＝  00000
Un002＝  00000
Un008＝  00000
Un00D＝00000000
```

← Shows the setting of Un000 (motor rotating speed) as 0 min^{-1}.

3

Wiring and Connection

3.1 Main Circuit Wiring 3-2
3.1.1 Main Circuit Terminals 3-2
3.1.2 Using a Standard Power Supply (Single-phase 100 V, Three-phase 200 V, or Three-phase 400 V) 3-3
3.1.3 Using the SERVOPACK with Single-phase, 200 V Power Input 3-11
3.1.4 Using the SERVOPACK with a DC Power Input 3-14
3.1.5 Using More Than One SERVOPACK 3-16
3.1.6 General Precautions for Wiring 3-17

3.2 I/O Signal Connections 3-18
3.2.1 I/O Signal (CN1) Names and Functions 3-18
3.2.2 Safety Function Signal (CN8) Names and Functions 3-19
3.2.3 Example of I/O Signal Connections 3-20

3.3 I/O Signal Allocations 3-21
3.3.1 Input Signal Allocations 3-21
3.3.2 Output Signal Allocations 3-23

3.4 Examples of Connection to Host Controller 3-24
3.4.1 Sequence Input Circuit 3-24
3.4.2 Sequence Output Circuit 3-25

3.5 Wiring MECHATROLINK-III Communications 3-27

3.6 Encoder Connection 3-28
3.6.1 Encoder Signal (CN2) Names and Functions 3-28
3.6.2 Encoder Connection Examples 3-28

3.7 Connecting Regenerative Resistors 3-30
3.7.1 Connecting Regenerative Resistors 3-30
3.7.2 Setting Regenerative Resistor Capacity 3-32

3.8 Noise Control and Measures for Harmonic Suppression 3-33
3.8.1 Wiring for Noise Control 3-33
3.8.2 Precautions on Connecting Noise Filter 3-35
3.8.3 Connecting a Reactor for Harmonic Suppression 3-36

3.1 Main Circuit Wiring

The names and specifications of the main circuit terminals are given below.

Also this section describes the general precautions for wiring and precautions under special environments.

3.1.1 Main Circuit Terminals

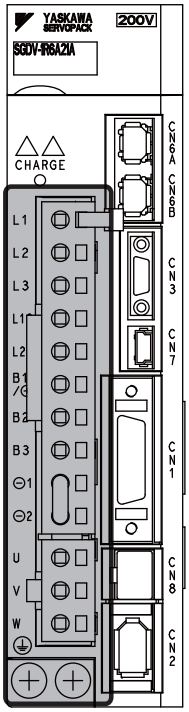

: Main circuit terminals

Terminal Symbols	Name	Model SGDV-□□□□	Specification
L1, L2	Main circuit power input terminals	□□□F	Single-phase 100 to 115 V, +10% to -15% (50/60 Hz)
L1, L2, L3		□□□A	Three-phase 200 to 230 V, +10% to -15% (50/60 Hz)
		□□□D	Three-phase 380 to 480 V, +10% to -15% (50/60 Hz)
L1C, L2C	Control power input terminals	□□□F	Single-phase 100 to 115 V, +10% to -15% (50/60 Hz)
		□□□A	Single-phase 200 to 230 V, +10% to -15% (50/60 Hz)
24 V, 0 V		□□□D	24 VDC, ±15%
B1/⊕, B2*1	External regenerative resistor connection terminals	R70F, R90F, 2R1F, 2R8F, R70A, R90A, 1R6A, 2R8A	If the regenerative capacity is insufficient, connect an external regenerative resistor between B1/⊕ and B2. Note: The external regenerative resistor is not included.
		3R8A, 5R5A, 7R6A, 120A, 180A, 200A, 330A, 1R9D, 3R5D, 5R4D, 8R4D, 120D, 170D	If the internal regenerative resistor is insufficient, remove the lead or shorting bar between B2 and B3 and connect an external regenerative resistor between B1/⊕ and B2. Note: The external regenerative resistor is not included.
		470A, 550A, 590A, 780A, 210D, 260D, 280D, 370D	Connect a regenerative resistor unit between B1/⊕ and B2. Note: The regenerative resistor unit is not included.

(cont'd)

Terminal Symbols	Name	Model SGDV-□□□□	Specification
⊖1, ⊖2*2	DC reactor connection terminal for power supply harmonic suppression	□□□A □□□D	If a countermeasure against power supply harmonic waves is needed, connect a DC reactor between ⊖1 and ⊖2.
B1/⊕	Main circuit positive terminal	□□□A □□□D	Use when DC power supply input is used.
⊖2 or ⊖	Main circuit negative terminal	□□□A □□□D	
U, V, W	Servomotor connection terminals	Use for connecting to the servomotor.	
⏚	Ground terminals (× 2)	Use for connecting the power supply ground terminal and servomotor ground terminal.	

*1. Do not short-circuit between B1/⊕ and B2. It may damage the SERVOPACK.
*2. The DC reactor connection terminals are short-circuited when the SERVOPACK is shipped from the factory: ⊖1 and ⊖2.

3.1.2 Using a Standard Power Supply (Single-phase 100 V, Three-phase 200 V, or Three-phase 400 V)

(1) Wire Types

Use the following type of wire for main circuit.

Cable Type		Allowable Conductor Temperature °C
Symbol	Name	
IV	600 V grade polyvinyl chloride insulated wire	60
HIV	600 V grade heat-resistant polyvinyl chloride insulated wire	75

The following table shows the wire sizes and allowable currents for three wires. Use wires with specifications equal to or less than those shown in the table.

- 600 V grade heat-resistant polyvinyl chloride insulated wire (HIV)

AWG Size	Nominal Cross Section Area (mm^2)	Configuration (Number of Wires/mm^2)	Conductive Resistance (Ω/km)	Allowable Current at Surrounding Air Temperature (A)		
				30°C	40°C	50°C
20	0.5	19/0.18	39.5	6.6	5.6	4.5
19	0.75	30/0.18	26.0	8.8	7.0	5.5
18	0.9	37/0.18	24.4	9.0	7.7	6.0
16	1.25	50/0.18	15.6	12.0	11.0	8.5
14	2.0	7/0.6	9.53	23	20	16
12	3.5	7/0.8	5.41	33	29	24
10	5.5	7/1.0	3.47	43	38	31
8	8.0	7/1.2	2.41	55	49	40
6	14.0	7/1.6	1.35	79	70	57
4	22.0	7/2.0	0.85	91	81	66

Note: The values in the table are for reference only.

(2) Main Circuit Wires

This section describes the main circuit wires for SERVOPACKs.

IMPORTANT

- The specified wire sizes are for use when the three lead cables are bundled and when the rated electric current is applied with a surrounding air temperature of 40°C.
- Use a wire with a minimum withstand voltage of 600 V for the main circuit.
- If cables are bundled in PVC or metal ducts, take into account the reduction of the allowable current.
- Use a heat-resistant wire under high surrounding air or panel temperatures, where polyvinyl chloride insulated wires will rapidly deteriorate.

■ Single-phase, 100 V

Terminal Symbols	Name	SGDV-□□□F			
		R70	R90	2R1	2R8
L1, L2	Main circuit power input terminals	HIV1.25		HIV2.0	
L1C, L2C	Control power input terminals	HIV1.25			
U, V, W	Servomotor connection terminals	HIV1.25			
B1/⊕, B2	External regenerative resistor connection terminals	HIV1.25			
⏚	Ground terminal	HIV2.0 or larger			

■ Three-phase, 200 V

Terminal Symbols	Name	SGDV-□□□A (Unit: mm^2)														
		R70	R90	1R6	2R8	3R8	5R5	7R6	120	180	200	330	470	550	590	780
L1, L2, L3	Main circuit power input terminals	HIV1.25			HIV2.0					HIV3.5		HIV 5.5	HIV 8.0	HIV 14.0	HIV22.0	
L1C, L2C	Control power input terminals	HIV1.25														
U, V, W	Servomotor connection terminals	HIV1.25				HIV2.0				HIV 3.5	HIV 5.5	HIV 8.0	HIV14.0		HIV22.0	
B1/⊕, B2	External regenerative resistor connection terminals	HIV1.25								HIV 2.0	HIV 3.5	HIV 5.5	HIV8.0		HIV22.0	
⏚	Ground terminal	HIV2.0 or larger														

■ Three-phase, 400 V

Terminal Symbols	Name	SGDV-□□□D (Unit: mm^2)									
		1R9	3R5	5R4	8R4	120	170	210	260	280	370
L1, L2, L3	Main circuit power input terminals	HIV1.25			HIV2.0		HIV3.5		HIV 5.5	HIV 8.0	HIV 14.0
24V, 0V	Control power input terminals	HIV1.25									
U, V, W	Servomotor connection terminals	HIV1.25			HIV2.0		HIV 3.5	HIV5.5		HIV 8.0	HIV 14.0
B1/⊕, B2	External regenerative resistor connection terminals	HIV1.25					HIV 2.0	HIV3.5		HIV 5.5	HIV 8.0
⏚	Ground terminal	HIV2.0 or larger									

(3) Typical Main Circuit Wiring Examples

Note the following points when designing the power ON sequence.

- Design the power ON sequence so that main power is turned OFF when a servo alarm signal (ALM) is output.
- The ALM signal is output for a maximum of five seconds when the control power is turned ON. Take this into consideration when designing the power ON sequence. Design the sequence so the ALM signal is activated and the alarm detection relay (1Ry) is turned OFF to stop the main circuit's power supply to the SERVOPACK.

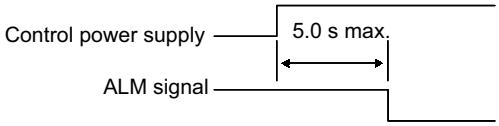

- Select the power supply specifications for the parts in accordance with the input power supply.

IMPORTANT

- When turning ON the control power supply and the main circuit power supply, turn them ON at the same time or turn the main circuit power supply after the control power supply. When turning OFF the power supplies, first turn the power for the main circuit OFF and then turn OFF the control power supply.

The typical main circuit wiring examples are shown below.

⚠ WARNING

- Do not touch the power supply terminals after turning OFF the power. High voltage may still remain in the SERVOPACK, resulting in electric shock. When the voltage is discharged, the charge indicator will turn OFF. Make sure the charge indicator is OFF before starting wiring or inspections.

■ Single-phase 100 V, SGDV-□□□F (SGDV-R70F, -R90F, -2R1F, -2R8F)

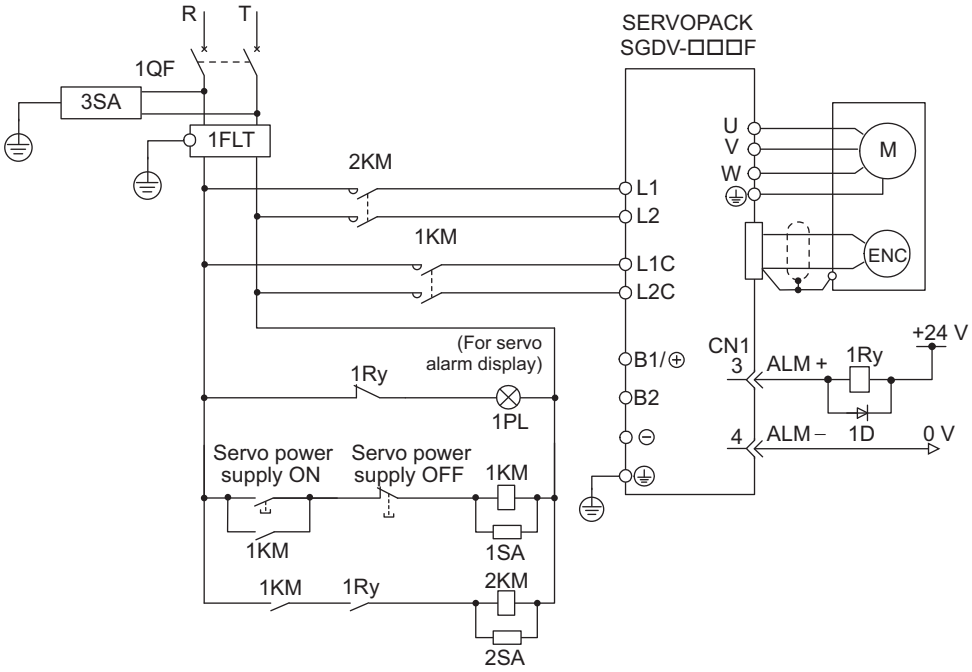

1QF: Molded-case circuit breaker
1FLT: Noise filter
1KM: Magnetic contactor (for control power supply)
2KM: Magnetic contactor (for main circuit power supply)
1Ry: Relay
1PL: Indicator lamp
1SA: Surge absorber
2SA: Surge absorber
3SA: Surge absorber
1D: Flywheel diode

■ Three-phase 200 V, SGDV-□□□A

- SGDV-R70A, -R90A, -1R6A, -2R8A, -3R8A, -5R5A, -7R6A, -120A, -180A, -200A, -330A

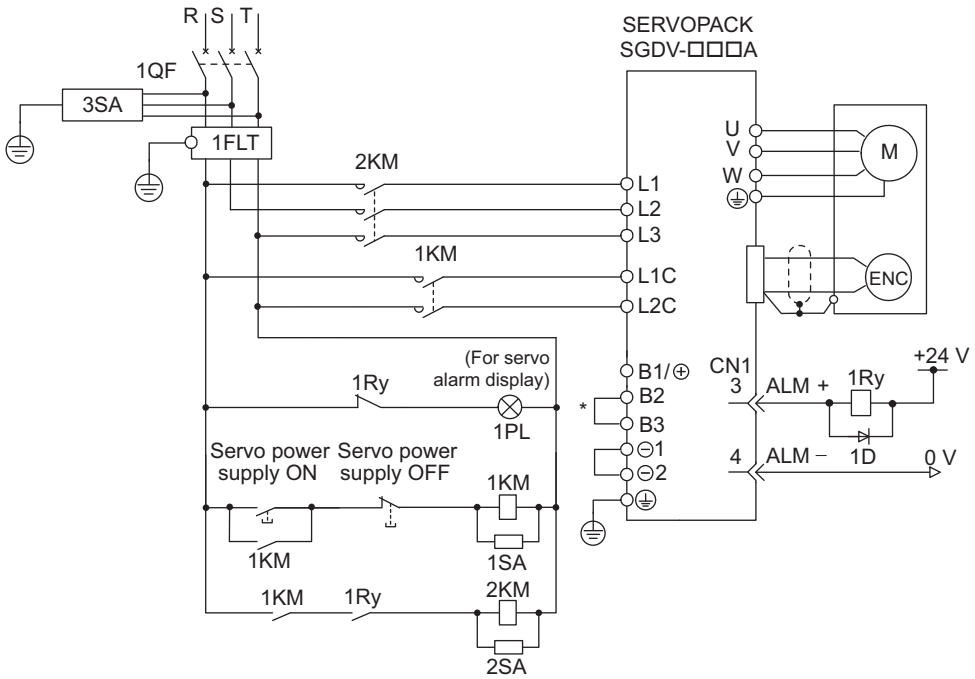

1QF: Molded-case circuit breaker
1FLT: Noise filter
1KM: Magnetic contactor (for control power supply)
2KM: Magnetic contactor (for main circuit power supply)
1Ry: Relay
1PL: Indicator lamp
1SA: Surge absorber
2SA: Surge absorber
3SA: Surge absorber
1D: Flywheel diode

* For the SGDV-R70A, -R90A, -1R6A, -2R8A, terminals B2 and B3 are not short-circuited. Do not short-circuit these terminals.

- SGDV-470A, -550A, -590A, -780A

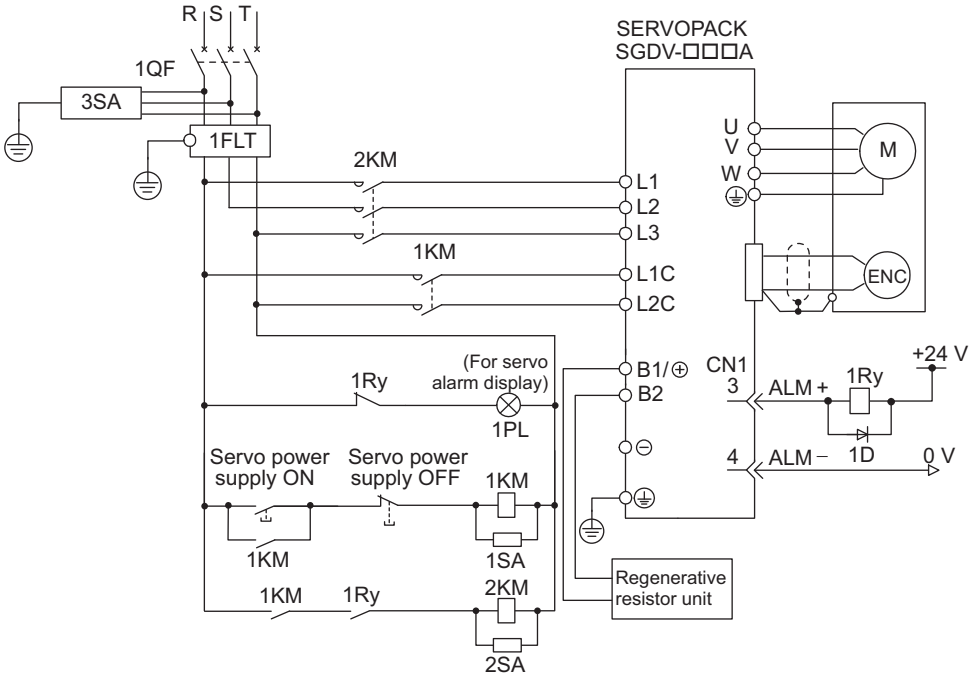

1QF: Molded-case circuit breaker
1FLT: Noise filter
1KM: Magnetic contactor (for control power supply)
2KM: Magnetic contactor (for main circuit power supply)
1Ry: Relay
1PL: Indicator lamp
1SA: Surge absorber
2SA: Surge absorber
3SA: Surge absorber
1D: Flywheel diode

■ Three-phase 400 V, SGDV-□□□D

- SGDV-1R9D, -3R5D, -5R4D, -8R4D, -120D, -170D

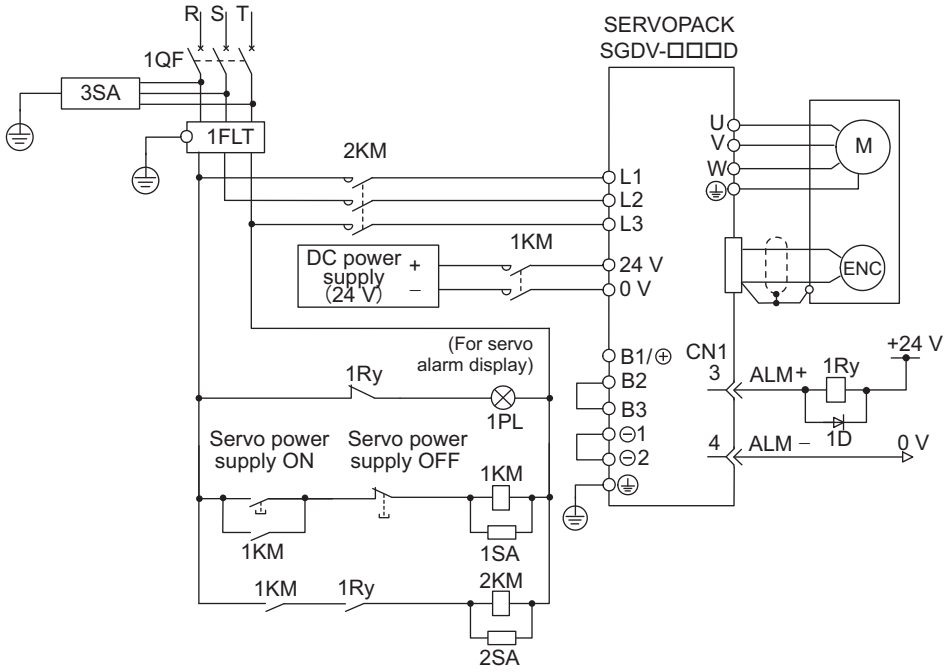

1QF: Molded-case circuit breaker
1FLT: Noise filter
1KM: Magnetic contactor (for control power supply)
2KM: Magnetic contactor (for main circuit power supply)
1Ry: Relay
1PL: Indicator lamp
1SA: Surge absorber
2SA: Surge absorber
3SA: Surge absorber
1D: Flywheel diode

- SGDV-210D, -260D, -280D, -370D

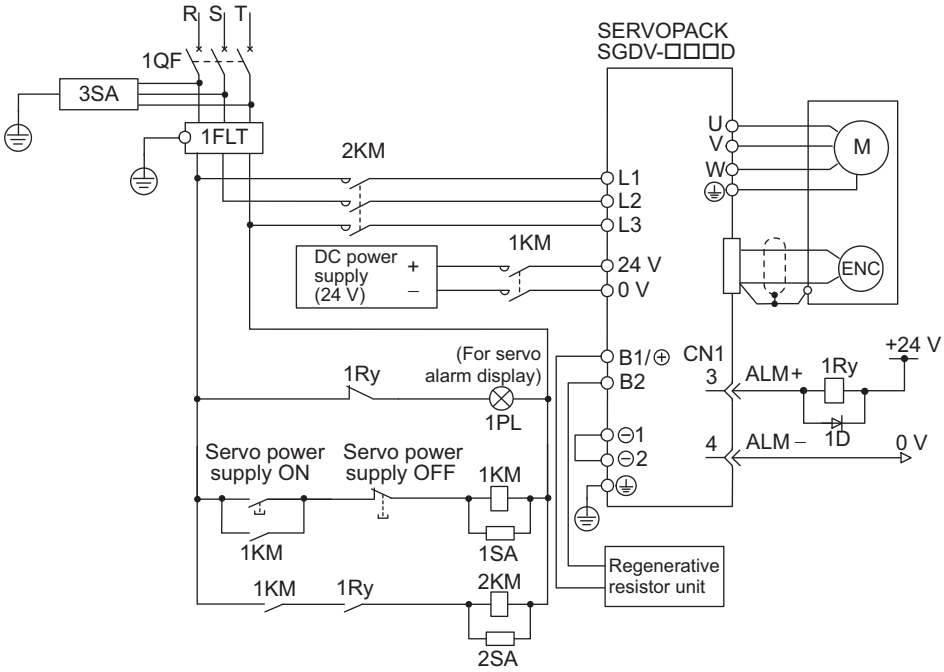

1QF: Molded-case circuit breaker
1FLT: Noise filter
1KM: Magnetic contactor (for control power supply)
2KM: Magnetic contactor (for main circuit power supply)
1Ry: Relay
1PL: Indicator lamp
1SA: Surge absorber
2SA: Surge absorber
3SA: Surge absorber
1D: Flywheel diode

(4) Power Supply Capacities and Power Losses

The following table shows the SERVOPACK's power supply capacities and power losses.

Main Circuit Power Supply	Maximum Applicable Servomotor Capacity [kW]	SERVOPACK Model SGDV-	Power Supply Capacity per SERVOPACK [kVA]	Output Current [Arms]	Main Circuit Power Loss [W]	Regenerative Resistor Power Loss [W]	Control Circuit Power Loss [W]	Total Power Loss [W]
Single-phase, 100 V	0.05	R70F	0.2	0.66	5.4	–	17	22.4
	0.1	R90F	0.3	0.91	7.8			24.8
	0.2	2R1F	0.7	2.1	14.4			31.4
	0.4	2R8F	1.4	2.8	25.6			42.6
Three-phase, 200 V	0.05	R70A	0.2	0.66	5.1	–	17	22.1
	0.1	R90A	0.3	0.91	7.3			24.3
	0.2	1R6A	0.6	1.6	13.5			30.5
	0.4	2R8A	1	2.8	24.0			41.0
	0.5	3R8A	1.4	3.8	20.1	8		45.1
	0.75	5R5A	1.6	5.5	43.8			68.8
	1.0	7R6A	2.3	7.6	53.6			78.6
	1.5	120A	3.2	11.6	65.8	10	22	97.8
	2.0	180A	4	18.5	111.9	16		149.9
	3.0	200A	5.9	19.6	113.8			161.4
	5.0	330A	7.5	32.9	263.7	36	27	326.7
	6.0	470A	10.7	46.9	279.4	(180)*1	33	312.4
	7.5	550A	14.6	54.7	357.8	(350)*2		390.8
	11	590A	21.7	58.6	431.7		48	479.7
	15	780A	29.6	78	599.0			647.0
Three-phase, 400 V	0.5	1R9D	1.1	1.9	24.6	14	21	59.6
	1.0	3R5D	2.3	3.5	46.1			81.1
	1.5	5R4D	3.5	5.4	71.3			106.3
	2.0	8R4D	4.5	8.4	77.9	28	25	130.9
	3.0	120D	7.1	11.9	108.7			161.7
	5.0	170D	11.7	16.5	161.1	36	24	221.1
	6.0	210D	12.4	20.8	172.7	(180)*3	27	199.7
	7.5	260D	14.4	25.7	218.6			245.6
	11	280D	21.9	28.1	294.6	(350)*4	30	324.6
	15	370D	30.6	37.2	403.8			433.8

*1. The value in parentheses is for the JUSP-RA04-E regenerative resistor unit.
*2. The value in parentheses is for the JUSP-RA05-E regenerative resistor unit.
*3. The value in parentheses is for the JUSP-RA18-E regenerative resistor unit.
*4. The value in parentheses is for the JUSP-RA19-E regenerative resistor unit.

Note 1. SGDV-R70F, -R90F, -2R1F, -2R8F, -R70A, -R90A, -1R6A, and -2R8A SERVOPACKs do not have built-in regenerative resistors. Connect an external regenerative resistor if the regenerative energy exceeds the specified value.

2. SGDV-470A, -550A, -590A, -780A, -210D, -260D, -280D, and -370D SERVOPACKs do not have built-in regenerative resistors. Make sure that a regenerative resistor unit or an external regenerative resistor is connected. Refer to *3.7 Connecting Regenerative Resistors* for details.

3. Regenerative resistor power losses are the allowable losses. Take the following actions if this value is exceeded.
   •Remove the lead or shorting bar between terminals B2 and B3 on the SERVOPACK main circuit for SGDV-3R8A, -5R5A, -7R6A, -120A, -180A, -200A, -330A, and 400-V SERVOPACKs.
   •Install an external regenerative resistor. Refer to *3.7 Connecting Regenerative Resistors* for details.

4. Both the regenerative resistor unit and the external regenerative resistor are not included.

(5) How to Select Molded-case Circuit Breaker and Fuse Capacities

The following table shows the SERVOPACK's current capacities and inrush current.
Select a molded-case circuit breaker and fuses in accordance with these specifications.

Main Circuit Power Supply	Maximum Applicable Servomotor Capacity [kW]	SERVO-PACK Model SGDV-	Power Supply Capacity per SERVOPACK [kVA]	Current Capacity		Inrush Current	
				Main Circuit [Arms]	Control Circuit [Arms]	Main Circuit [A0-p]	Control Circuit [A0-p]
Single-phase, 100 V	0.05	R70F	0.2	1.5	0.38	16.5	35
	0.1	R90F	0.3	2.5			
	0.2	2R1F	0.7	5			
	0.4	2R8F	1.4	10			
Three-phase, 200 V	0.05	R70A	0.2	1.0	0.2	33	70
	0.1	R90A	0.3	1.0			
	0.2	1R6A	0.6	2.0			
	0.4	2R8A	1	3.0			
	0.5	3R8A	1.4	3.0			33
	0.75	5R5A	1.6	6.0			
	1.0	7R6A	2.3	6.0			
	1.5	120A	3.2	7.3	0.25		
	2.0	180A	4	9.7			
	3.0	200A	5.9	15			
	5.0	330A	7.5	25	0.3	65.5	
	6.0	470A	10.7	29			
	7.5	550A	14.6	37			
	11	590A	21.7	54	0.45	109	48
	15	780A	29.6	73			
Three-phase, 400 V	0.5	1R9D	1.1	1.4	1.2	17	–
	1.0	3R5D	2.3	2.9			
	1.5	5R4D	3.5	4.3			
	2.0	8R4D	4.5	5.8	1.4	34	
	3.0	120D	7.1	8.6			
	5.0	170D	11.7	14.5		57	
	6.0	210D	12.4	17.4	1.5	34	
	7.5	260D	14.4	21.7			
	11	280D	21.9	31.8	1.7	68	
	15	370D	30.6	43.4			

Note 1. To comply with the EU low voltage directive, connect a fuse to the input side as protection against accidents caused by short-circuits.
Select fuses or molded-case circuit breakers that are compliant with UL standards.
The table above also provides the net values of current capacity and inrush current. Select a fuse and a molded-case circuit breaker which meet the breaking characteristics shown below.

- Main circuit, control circuit: No breaking at three times the current values shown in the table for 5 s.
- Inrush current: No breaking at the current values shown in the table for 20 ms.

2. The following restrictions apply to UL standard compliance conditions.

SERVOPACK Model SGDV-	Restrictions
180A, 200A	Available rated current for modeled-case circuit breaker: 40 A or less
330A	• Available rated current for non-time delay fuse: 70 A or less • Available rated current for time delay fuse: 40 A or less • Do not use single wires.
470A, 550A	• Available rated current for molded-case circuit breaker: 60 A or less • Available rated current for non-time delay fuse or time delay fuse: 60 A or less
590A, 780A	• Available rated current for molded-case circuit breaker: 100 A or less. • Available rated current for non-time delay fuse or time delay fuse: 100 A or less (Available rated current for a non-time delay, Class J fuse or a faster fuse: 125 A or less)
210D, 260D	• Available rated current for molded-case circuit breaker: 60 A or less. • Available rated current for non-time-delay fuse: 60 A or less. • Available rated current for time delay fuse: 35 A or less
280D, 370D	• Available rated current for molded-case circuit breaker: 80 A or less • Available rated current for non-time delay fuse: 125 A or less • Available rated current for time delay fuse: 75 A or less

3.1.3 Using the SERVOPACK with Single-phase, 200 V Power Input

Some models of Σ-V series three-phase 200 V power input SERVOPACK can be used also with a single-phase 200 V power supply.

The following models support a single-phase 200-V power input.
SGDV-R70A, -R90A, -1R6A, -2R8A, -5R5A

When using the SERVOPACK with single-phase, 200 V power input, set parameter Pn00B.2 to 1.

There is no need to change the parameter for a SGDV-120A21A008000 SERVOPACK because it uses a single-phase 200 V power supply.

(1) Parameter Setting

■ Single-phase Power Input Selection

Parameter		Meaning	When Enabled	Classification
Pn00B	n.□0□□ [Factory setting]	Enables use of three-phase power supply for three-phase SERVOPACK.	After restart	Setup
	n.□1□□	Enables use of single-phase power supply for three-phase SERVOPACK.		

⚠ WARNING

- If single-phase 200 V is input to a SERVOPACK with a single-phase power input without changing the setting of Pn00B.2 to 1 (single-phase power input), a main circuit cable open phase alarm (A.F10) will be detected.
- SERVOPACK models other than those for single-phase 200-V power input do not support single-phase power input. If a single-phase 200 V is input to the SERVOPACK that do not support single-phase power input, the main circuit cable open phase alarm (A.F10) will be detected.
- When using a single-phase 200 V power supply, the SGDV-R70A, -R90A, -1R6A, -2R8A, or -5R5A SERVOPACK may not be able to produce the same servomotor torque-speed characteristics as using a three-phase 200 V power input. Refer to the diagram of each servomotor torque-speed characteristics in *Σ-V Series Product Catalog* (No.: KAEP S800000 42).

(2) Main Circuit Power Input Terminals

Connect a single-phase 200 V power supply of the following specifications to L1 and L2 terminals.

The specifications of the power supplies other than the main circuit power supply are the same as for three-phase power supply input.

Terminal Symbols	Name	Model SGDV-□□□A	Specifications
L1, L2	Main circuit power input terminals	R70, R90, 1R6, 2R8, 5R5	Single-phase 200 V to 230 V, +10% to -15% (50/60 Hz)
		120*2	Single-phase 220 V to 230 V, +10% to -15% (50/60 Hz)
L3*1	–	R70, R90, 1R6, 2R8, 5R5	None

*1. Do not use L3 terminal.
*2. The official model number is SGDV-120A21A008000.

(3) Main Circuit Wire for SERVOPACKs

Terminal Symbols	Name	Model SGDV-□□□A (Unit: mm^2)					
		R70	R90	1R6	2R8	5R5	120*
L1, L2	Main circuit power input terminals	HIV1.25			HIV2.0		HIV3.5
L1C, L2C	Control power input terminals	HIV1.25					
U, V, W	Servomotor connection terminals	HIV1.25				HIV2.0	
B1/⊕, B2	External regenerative resistor connection terminals	HIV1.25					
⏚	Ground terminal	HIV2.0 or larger					

* The official model number is SGDV-120A21A008000.

(4) Wiring Example with Single-phase 200-V Power Supply Input

■ SERVOPACK with Single-phase, 200-V Power Supply

Applicable SERVOPACK Model: SGDV-R70A, -R90A, -1R6A, -2R8A, -5R5A, and -120A21A008000.

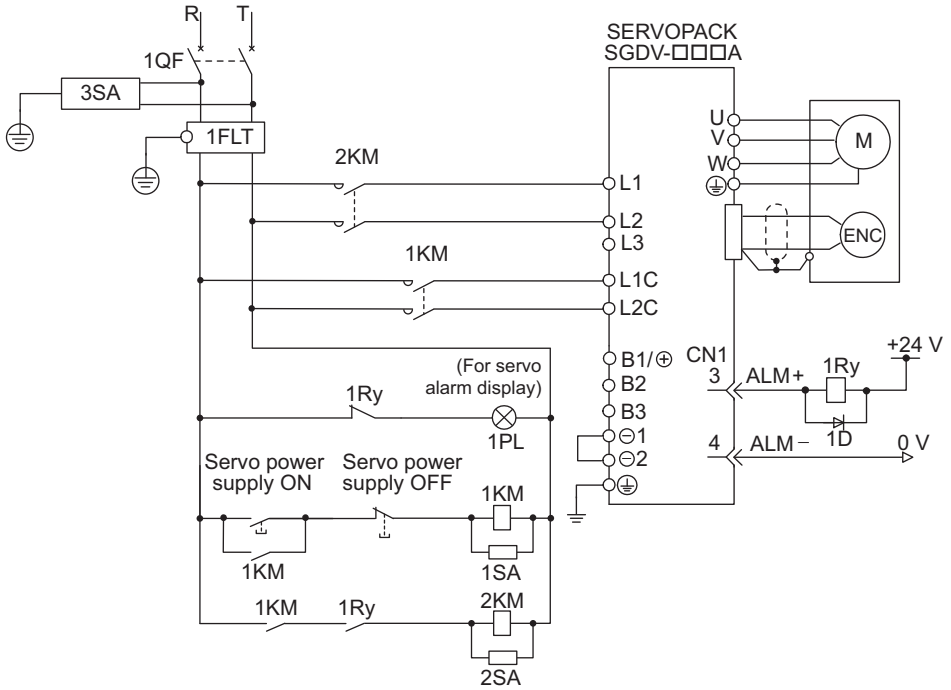

1QF: Molded-case circuit breaker
1FLT: Noise filter
1KM: Magnetic contactor (for control power supply)
2KM: Magnetic contactor (for main circuit power supply)
1Ry: Relay

1PL : Indicator lamp
1SA : Surge absorber
2SA : Surge absorber
3SA : Surge absorber
1D: Flywheel diode

(5) Power Supply Capacities and Power Losses

The following table shows SERVOPACK's power supply capacities and power losses when using single-phase 200 V power supply.

Main Circuit Power Supply	Maximum Applicable Servomotor Capacity [kW]	SERVOPACK Model SGDV-	Power Supply Capacity per SERVOPACK [kVA]	Output Current [Arms]	Main Circuit Power Loss [W]	Regenerative Resistor Power Loss [W]	Control Circuit Power Loss [W]	Total Power Loss [W]
Single-phase, 200 V	0.05	R70A	0.2	0.66	5.2	–	17	22.2
	0.1	R90A	0.3	0.91	7.4			24.4
	0.2	1R6A	0.7	1.6	13.7			30.7
	0.4	2R8A	1.2	2.8	24.9			41.9
	0.75	5R5A	1.9	5.5	52.7	8		77.7
	1.5	120A*	4	11.6	68.2	10	22	100.2

* The official model number is SGDV-120A21A008000.

Note 1. SGDV-R70A, -R90A, -1R6A, and -2R8A SERVOPACKs do not have built-in regenerative resistors. If the regenerative energy exceeds the specified value, connect an external regenerative resistor between B1/⊕ and B2.

2. Regenerative resistor power losses are allowable losses. Take the following action if this value is exceeded.
   - Remove the lead or shorting bar between terminals B2 and B3 on the SERVOPACK main circuit of SGDV-5R5A, -120A SERVOPACKs.
   - Install an external regenerative resistor between external regenerative resistor connection terminals B1/⊕ and B2.

3. External regenerative resistors are not included.

(6) How to Select Molded-case Circuit Breaker and Fuse Capacities

The following table shows the SERVOPACK's current capacities and inrush current when using single-phase 200 V power supply. Select a molded-case circuit breaker and fuses in accordance with these specifications.

Main Circuit Power Supply	Maximum Applicable Servomotor Capacity [kW]	SERVOPACK Model SGDV-	Power Supply Capacity per SERVOPACK [kVA]	Current Capacity		Inrush Current	
				Main Circuit [Arms]	Control Circuit [Arms]	Main Circuit [A0-p]	Control Circuit [A0-p]
Single-phase, 200 V	0.05	R70A	0.2	2	0.2	33	70
	0.1	R90A	0.3	2			
	0.2	1R6A	0.7	3			
	0.4	2R8A	1.2	5			
	0.75	5R5A	1.9	9			33
	1.5	120A*	4	16	0.25		

* The official model number is SGDV-120A21A008000.

Note 1. To comply with the EU low voltage directive, connect a fuse to the input side as protection against accidents caused by short-circuits. Select the fuse for the input side that are compliant with UL standards.
The table above also provides the net values of current capacity and inrush current. Select a fuse and a molded-case circuit breaker which meet the breaking characteristics shown below.
•Main circuit, control circuit: No breaking at three times the current values shown in the table for 5 s.
•Inrush current: No breaking at the current values shown in the table for 20 ms.

2. The following restrictions apply to UL standard compliance conditions for SGDV-120A21A008000 SERVOPACKs.
Current rating when using molded-case circuit breaker: 40 A max.

3.1.4 Using the SERVOPACK with a DC Power Input

(1) Parameter Setting

When using a DC power supply, make sure to set the parameter Pn001.2 to 1 (DC power input supported) before inputting DC power.

Parameter		Meaning	When Enabled	Classification
Pn001	n.□0□□	Enables use of AC power input.	After restart	Setup
	n.□1□□	Enables use of DC power input.		

Observe the following precautions.

⚠ WARNING

- Either AC or DC power can be input to the 200-V, 400-V SERVOPACKs. Always set Pn001.2 to 1 to specify a DC power input before inputting DC power. Only AC power can be input to the 100-V SERVOPACKs.
  If DC power is input without changing the parameter setting, the SERVOPACK's internal elements will burn and may cause fire or damage to the equipment.
- With a DC power input, time is required to discharge electricity after the main power supply is turned OFF. A high residual voltage may remain in the SERVOPACK after the power supply is turned OFF. Be careful not to get an electric shock.
- Install fuses on the wires if DC power is used.
- Servomotor returns a regenerated energy to the power supply. The SERVOPACK that can use a DC power supply is not capable of processing the regenerated energy. Provide measures to process the regenerated energy on the power supply.
- With a DC power input, connect an external inrush current limit circuit.
  Failure to observe this caution may result in damage to the equipment.

(2) DC Power Supply Input Terminals for the Main and Control Circuits

■ Three-phase, 200 V for SGDV-□□□A
(□□□ = R70, R90, 1R6, 2R8, 3R8, 5R5, 7R6, 120, 180, 200, 330)

Terminal Symbols	Name	Specifications
B1/ ⊕	Main circuit positive terminal	270 to 320 VDC
⊖ 2	Main circuit negative terminal	0 VDC
L1C, L2C	Control power input terminal	200 to 230 VAC

■ Three-phase 200-V SGDV-□□□A
(□□□ = 470, 550, 590, 780)

Terminal Symbols	Name	Specifications
B1/ ⊕	Main circuit positive terminal	270 to 320 VDC
⊖	Main circuit negative terminal	0 VDC
L1C, L2C	Control power input terminal	200 to 230 VAC

■ Three-phase, 400 V for SGDV-□□□D
(□□□ = 1R9, 3R5, 5R4, 8R4, 120, 170, 210, 260, 280, 370)

Terminal Symbols	Name	Specifications
B1/ ⊕	Main circuit positive terminal	513 to 648 VDC
⊖ 2	Main circuit negative terminal	0 VDC
24 V, 0 V	Control power input terminal	24 VDC±15%

(3) Wiring Example with DC Power Supply Input

■ 200-V SERVOPACK SGDV-□□□A

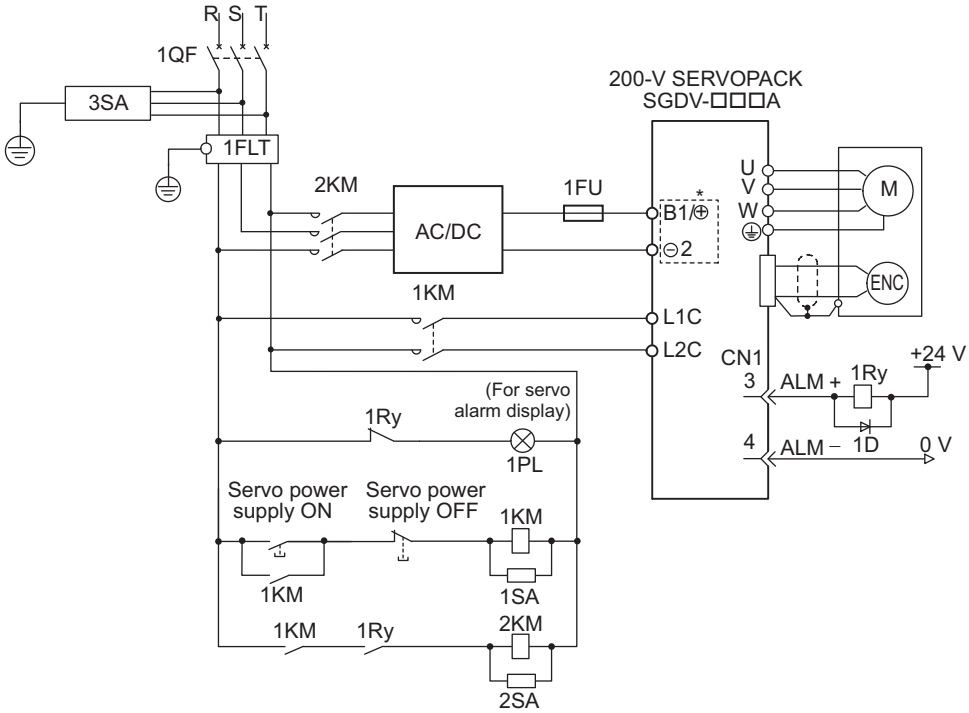

1QF: Molded-case circuit breaker
1FLT: Noise filter
1KM: Magnetic contactor (for control power supply)
2KM: Magnetic contactor (for main circuit power supply)
1Ry: Relay
1PL: Indicator lamp
1SA: Surge absorber
2SA: Surge absorber
3SA: Surge absorber
1D: Flywheel diode

∗ Terminal names differ depending on model of SERVOPACK. Refer to *(2) DC Power Supply Input Terminals for the Main and Control Circuits.*

■ 400-V SERVOPACK SGDV-□□□D

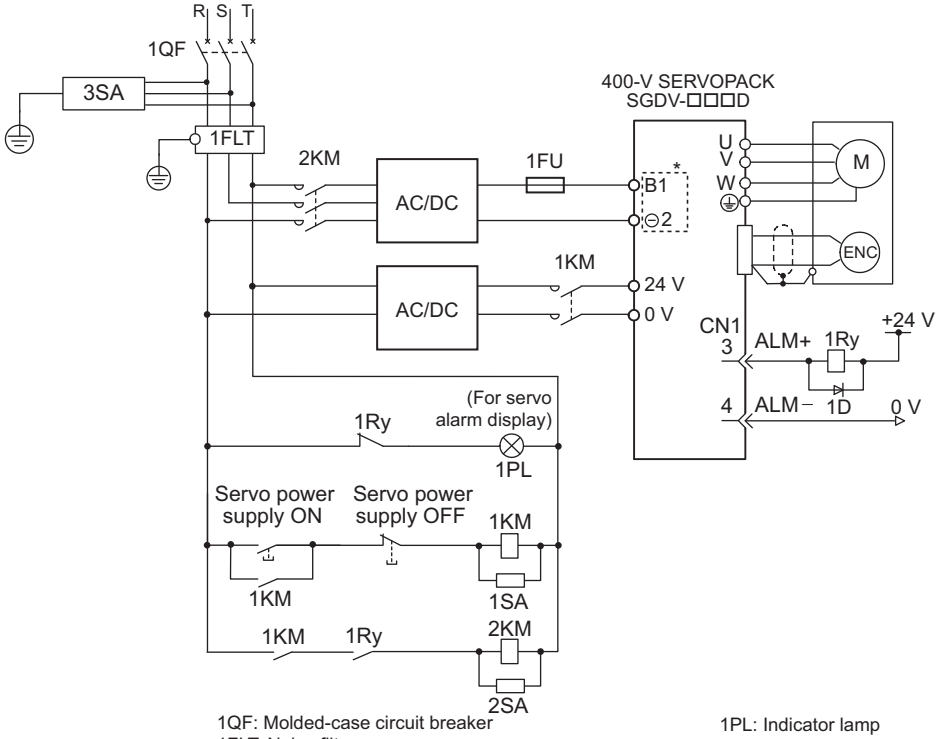

1QF: Molded-case circuit breaker
1FLT: Noise filter
1KM: Magnetic contactor (for control power supply)
2KM: Magnetic contactor (for main circuit power supply)
1Ry: Relay
1PL: Indicator lamp
1SA: Surge absorber
2SA: Surge absorber
3SA: Surge absorber
1D: Flywheel diode

∗ Terminal names differ depending on model of SERVOPACK. Refer to *(2) DC Power Supply Input Terminals for the Main and Control Circuits.*

3.1.5 Using More Than One SERVOPACK

This section shows an example of the wiring and the precautions when more than one SERVOPACK is used.

(1) Wiring Example

Connect the alarm output (ALM) terminals for three SERVOPACKs in series to enable alarm detection relay 1RY to operate. When the alarm occurs, the ALM output signal transistor is turned OFF.

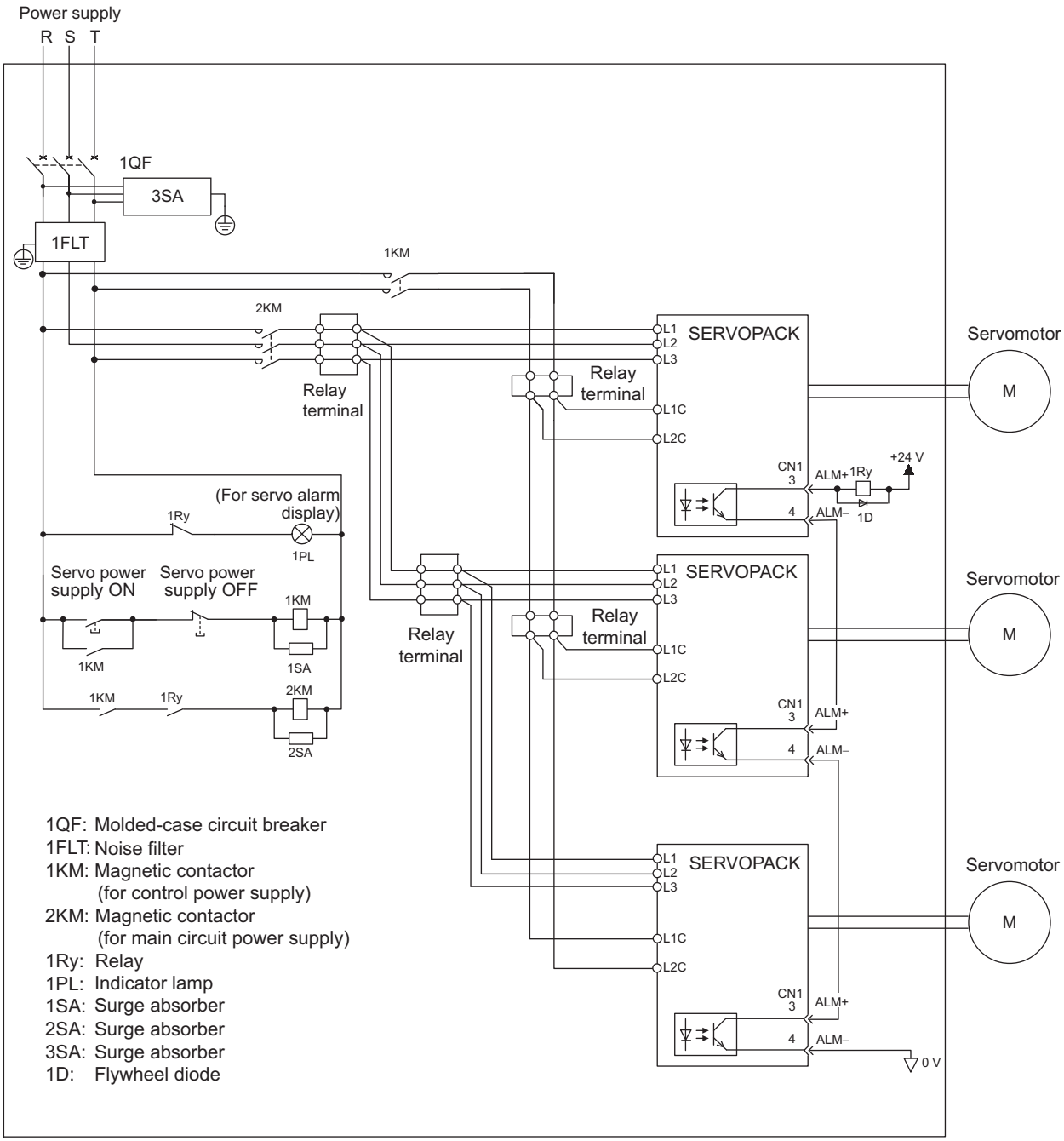

(2) Precautions

Multiple SERVOPACKs can share a single molded-case circuit breaker (1QF) or noise filter. Always select a molded-case circuit breaker or noise filter that has enough capacity for the total power supply capacity (load conditions) of the SERVOPACKs.

3.1.6 General Precautions for Wiring

IMPORTANT

- Use a molded-case circuit breaker (1QF) or fuse to protect the main circuit.
  The SERVOPACK connects directly to a commercial power supply; it is not isolated through a transformer or other device.
  Always use a molded-case circuit breaker (1QF) or fuse to protect the servo system from accidents involving different power system voltages or other accidents.
- Install a ground fault detector.
  The SERVOPACK does not have a built-in protective circuit for grounding.
  To configure a safer system, install a ground fault detector against overloads and short-circuiting, or install a ground fault detector combined with a molded-case circuit breaker.
- Do not turn the power ON and OFF more than necessary.
  - Do not use the SERVOPACK for applications that require the power to turn ON and OFF frequently. Such applications will cause elements in the SERVOPACK to deteriorate.
  - As a guideline, at least one hour should be allowed between the power being turned ON and OFF once actual operation has been started.

To ensure safe, stable application of the servo system, observe the following precautions when wiring.

- Use the connection cables specified in the *Σ-V Series Product Catalog* (No.: KAEP S800000 42). Design and arrange the system so that each cable will be as short as possible.
- Use shielded twisted-pair cables or screened unshielded twisted-pair cables for I/O signal cables and encoder cables.
- The maximum wiring length is 3 m for I/O signal cables, 50 m for encoder cables or servomotor main circuit cables, and 10 m for control power supply cables for the SERVOPACK with a 400-V power supply (+24 V, 0 V).
- Observe the following precautions when wiring the ground.
  - Use a cable as thick as possible (at least 2.0 mm^2).
  - Grounding to a resistance of 100 Ω or less for 100-V, 200-V SERVOPACKs, 10 Ω or less for 400-V SERVOPACKs is recommended.
  - Be sure to ground at only one point.
  - Ground the servomotor directly if the servomotor is insulated from the machine.
- The signal cable conductors are as thin as 0.2 mm^2 or 0.3 mm^2. Do not impose excessive bending force or tension.

3.2 I/O Signal Connections

This section describes the names and functions of I/O signals (CN1). Also connection examples by control method are shown.

3.2.1 I/O Signal (CN1) Names and Functions

The following table shows the names and functions of I/O signals (CN1).

(1) Input Signals

Signal	Pin No.	Name	Function	Reference Section
P-OT (/SI1) N-OT (/SI2)	7 8	Forward run prohibited, Reverse run prohibited	With overtravel prevention: Stops servomotor when movable part travels beyond the allowable range of motion.	4.3.1
/DEC (/SI3)	9	Homing deceleration switch signal	Connects the deceleration limit switch for homing.	–
/EXT 1 (/SI4) /EXT 2 (/SI5) /EXT 3 (/SI6)	10 11 12	External latch signal 1 External latch signal 2 External latch signal 3	Connects the external signals that latch the current feedback pulse counter.	–
/SI0	13	General-purpose input signal	Used for general-purpose input. Monitored in the I/O monitor field of MECHATROLINK-II.	–
+24VIN	6	Control power supply for sequence signal	Control power supply input for sequence signals. Allowable voltage fluctuation range: 11 to 25 V Note: The 24 VDC power supply is not included.	3.4.1
BAT (+) BAT (-)	14 15	Battery (+) input signal Battery (–) input signal	Connecting pin for the absolute encoder backup battery. Do not connect when the encoder cable with the battery case is used.	3.6.2 4.7.1
/P-CL /N-CL	Can be allocated	Forward external torque limit Reverse external torque limit	The allocation of an input signal to a pin can be changed in accordance with the function required.	–

Note 1. The allocation of the input signals (/SI1 to /SI6) can be changed. For details, refer to *3.3.1 Input Signal Allocations*.
2. If the Forward run prohibited/ Reverse run prohibited function is used, the SERVOPACK is stopped by software controls, not by electrical or mechanical means. If the application does not satisfy the safety requirements, add an external circuit for safety reasons as required.

(2) Output Signals

Signal	Pin No.	Name	Function	Reference Section
ALM+ ALM-	3 4	Servo alarm output signal	Turns OFF when an error is detected.	–
/BK+ (/SO1+) /BK- (/SO1-)	1 2	Brake interlock signal	Controls the brake. The brake is released when the signal turns ON. Allocation can be changed to general-purpose output signals (/SO1+, /SO1-).	4.3.2
/SO2+ /SO2- /SO3+ /SO3-	23 24 25 26	General-purpose output signal	Used for general-purpose output. Note: Set the parameter to allocate a function.	–
/COIN /V-CMP /TGON /S-RDY /CLT /VLT /WARN /NEAR	Can be allocated	Positioning completion Speed coincidence detection Rotation detection servo ready Torque limit Speed limit detection Warning Near	The allocation of an output signal to a pin can be changed in accordance with the function required.	–
PAO /PAO	17 18	Phase-A signal	Encoder output pulse signals for two-phase pulse train with 90° phase differential	4.4.4 4.7.5
PBO /PBO	19 20	Phase-B signal		
PCO /PCO	21 22	Phase-C signal	Origin pulse output signal	
SG	16	Signal ground	Connects to the 0 V pin on the control circuit of the host controller.	–
FG	Shell	Frame ground	Connected to frame ground if the shielded wire of the I/O signal cable is connected to the connector shell.	–

Note: The allocation of the output signals (/SO1 to /SO3) can be changed. For details, refer to *3.3.2 Output Signal Allocations.*

3.2.2 Safety Function Signal (CN8) Names and Functions

The following table shows the terminal layout of safety function signals (CN8).

Signal Name	Pin No.	Function	
/HWBB1+	4	Hard wire baseblock input 1	For hard wire baseblock input. Baseblock (motor current off) when OFF.
/HWBB1-	3		
/HWBB2+	6	Hard wire baseblock input 2	
/HWBB2-	5		
EDM1+	8	Monitored circuit status output 1	ON when the /HWBB1 and the /HWBB2 signals are input and the SERVOPACK enters a baseblock state.
EDM1-	7		
–	1*	–	
–	2*	–	

* Do not use pins 1 and 2 because they are connected to the internal circuits.

3.2.3 Example of I/O Signal Connections

The following diagram shows a typical connection example.

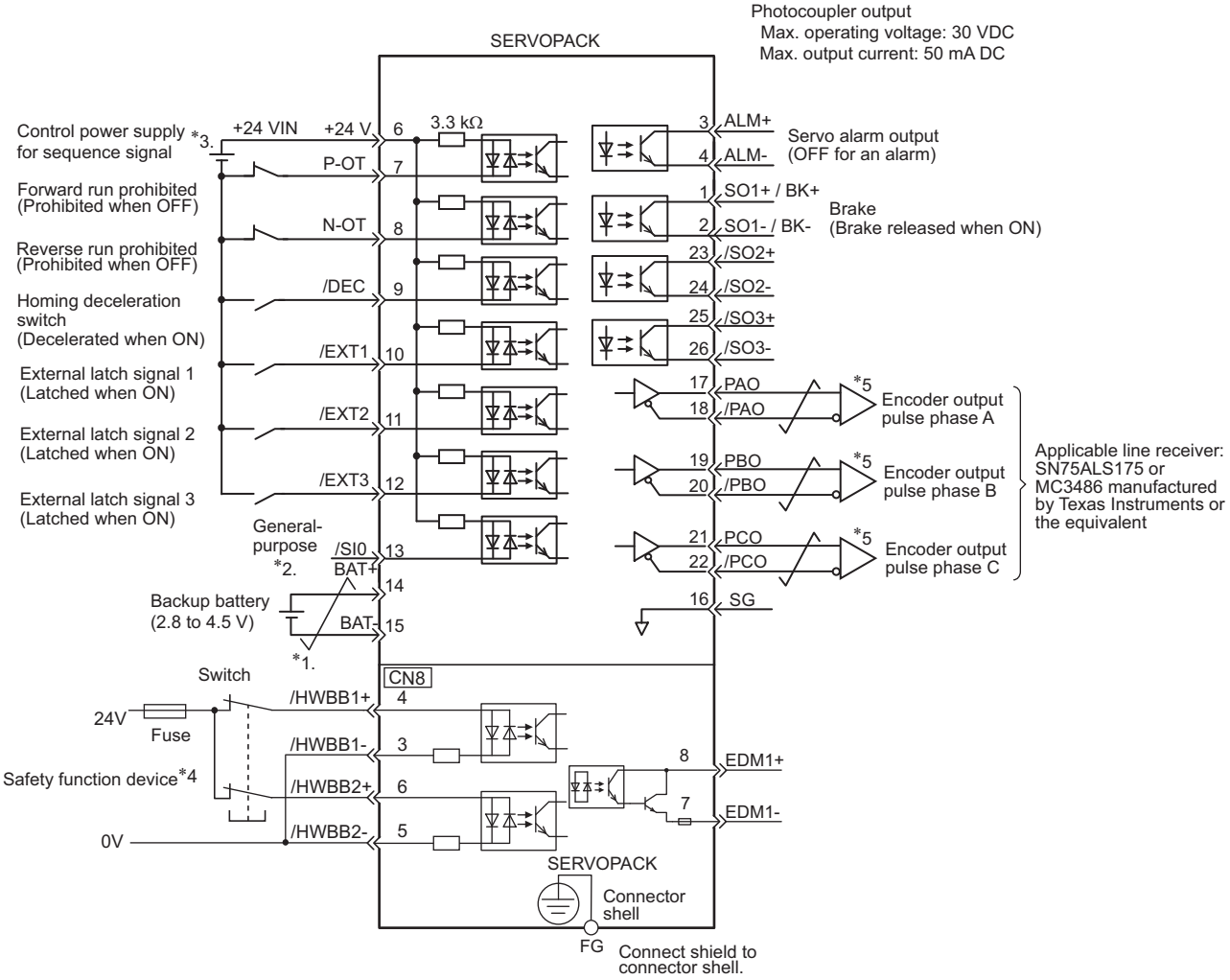

*1. represents twisted-pair wires.

*2. Connect when using an absolute encoder. When the encoder cable with the battery case is connected, do not connect a backup battery.

*3. The 24-VDC power supply is not included. Use a 24-VDC power supply with double insulation or reinforced insulation.

*4. When using the safety function, a safety function device must be connected and the wiring that is necessary to activate the safety function must be done to turn ON the servomotor power. When not using the safety function, use the SERVOPACK with the JZSP-CVH05-E Plug (provided as an accessory) inserted into the CN8.

*5. Always use line receivers to receive the output signals.

Note: The functions allocated to the input signals /DEC, P-OT, N-OT, /EXT1, /EXT2, and /EXT3 and the output signals /SO1, /SO2, and /SO3 can be changed by using the parameters. Refer to *3.3.1 Input Signal Allocations* and *3.3.2 Output Signal Allocations*.

3.3 I/O Signal Allocations

This section describes the I/O signal allocations.

3.3.1 Input Signal Allocations

IMPORTANT

- Inverting the polarity of the forward run prohibited and reverse run prohibited signals from the factory setting will prevent the overtravel function from working in case of signal line disconnections or other failures.
  If this setting is absolutely necessary, check the operation and confirm that there are no safety problems.
- When two or more signals are allocated to the same input circuit, input signal level is valid for all allocated signals, resulting in an unexpected machine operation.

Input signals are allocated as shown in the following table.

Refer to the *Interpreting the Input Signal Allocation Tables* and change the allocations accordingly.

<Interpreting the Input Signal Allocation Tables>

The parameter set values to be used are shown.
Signals are allocated to CN1 pins according to the selected set values.
Values in cells in bold lines are the factory settings.

Level at which input signal allocations are valid.

Input Signal Names and Parameters	Validity Level	Input Signal	CN1 Pin Numbers							Connection Not Required (SERVOPACK judges the connection)	
			13	7	8	9	10	11	12	Always ON	Always OFF
Forward Run Prohibited **Pn50A.3**	H	P-OT	0	**1**	2	3	4	5	6	7	8
	L	/P-OT	9	A	B	C	D	E	F		

If always ON (7) or always OFF (8) is set, signals will be processed in the SERVOPACK, which will eliminate the need for wiring changes.

Input Signal Names and Parameters	Validity Level	Input Signal	CN1 Pin Numbers							Connection Not Required (SERVOPACK judges the connection)	
			13	7	8	9	10	11	12	Always ON	Always OFF
Forward Run Prohibited **Pn50A.3**	H	P-OT	0	1	2	3	4	5	6	7	8
	L	/P-OT	9	A	B	C	D	E	F		
Reverse Run Prohibited **Pn50B.0**	H	N-OT	0	1	2	3	4	5	6	7	8
	L	/N-OT	0	A	B	C	D	E	F		
Forward External Torque Limit **Pn50B.2**	L	/P-CL	0	1	2	3	4	5	6	7	8
	H	P-CL	9	A	B	C	D	E	F		
Reserve External Torque Limit **Pn50B.3**	L	/N-CL	0	1	2	3	4	5	6	7	8
	H	N-CL	9	A	B	C	D	E	F		
Homing Deceleration LS **Pn511.0**	L	/DEC	0	1	2	3	4	5	6	7	8
	H	DEC	9	A	B	C	D	E	F		
External Latch Signal 1 **Pn511.1**	L	EXT1	*	*	*	*	4	5	6	7	8
	H	/EXT1	*	*	*	*	D	E	F		
External Latch Signal 2 **Pn511.2**	L	EXT2	*	*	*	*	4	5	6	7	8
	H	/EXT2	*	*	*	*	D	E	F		
External Latch Signal 3 **Pn511.3**	L	EXT3	*	*	*	*	4	5	6	7	8
	H	/EXT3	*	*	*	*	D	E	F		

* Always set to "Invalid."

3.3.2 Output Signal Allocations

IMPORTANT

- The signals not detected are considered as "Invalid." For example, Positioning Completion (/COIN) signal in speed control is "Invalid."
- Inverting the polarity of the brake signal (/BK), i.e. positive logic, will prevent the holding brake from working in case of its signal line disconnection.
  If this setting is absolutely necessary, check the operation and confirm that there are no safety problems.
- When two or more signals are allocated to the same output circuit, a signal is output with OR logic circuit.

Output signals are allocated as shown in the following table.

Refer to the *Interpreting the Output Signal Allocation Tables* and change the allocations accordingly.

<Interpreting the Output Signal Allocation Tables>

The parameter set values to be used are shown.
Signals are allocated to CN1 pins according to the selected set values.
Values in cells in bold lines are the factory settings.

Output Signal Names and Parameters	Output Signal	CN1 Pin Numbers			Invalid (not use)
		1/ (2)	23/ (24)	25/ (26)	
Brake **Pn50F.2**	/BK	1	2	3	0

Output Signal Names and Parameters	Output Signal	CN1 Pin Numbers			Invalid (not use)
		1/ (2)	23/ (24)	25/ (26)	
Positioning Completion **Pn50E.0**	/COIN	1	2	3	0
Speed Coincidence Detection **Pn50E.1**	/V-CMP	1	2	3	0
Rotation Detection **Pn50E.2**	/TGON	1	2	3	0
Servo Ready **Pn50E.3**	/S-RDY	1	2	3	0
Torque Limit Detection **Pn50F.0**	/CLT	1	2	3	0
Speed Limit Detection **Pn50F.1**	/VLT	1	2	3	0
Brake **Pn50F.2**	/BK	1	2	3	0
Warning **Pn50F.3**	/WARN	1	2	3	0
Near **Pn510.0**	/NEAR	1	2	3	0
Pn512.0=1	Polarity inversion of CN1-1(2)				0 (Not invert at factory setting)
Pn512.1=1	Polarity inversion of CN1-23(24)				
Pn512.2=1	Polarity inversion of CN1-25(26)				

3.4 Examples of Connection to Host Controller

This section shows examples of SERVOPACK I/O signal connection to the host controller.

3.4.1 Sequence Input Circuit

(1) Photocoupler Input Circuit

CN1 connector terminals 6 to 13 are explained below.

The sequence input circuit interface is connected through a relay or open-collector transistor circuit. When connecting through a relay, use a low-current relay. If a low-current relay is not used, a faulty contact may result.

Relay Circuit Example	Open-collector Circuit Example
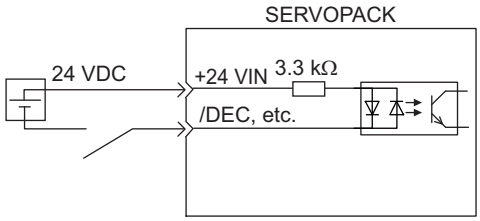	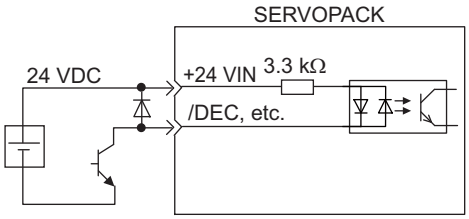

Note: The 24 VDC external power supply capacity must be 50 mA minimum.

The SERVOPACK's input circuit uses bidirectional photocoupler. Select either the sink circuit or the source circuit according to the specifications required for each machine.

Note: • The connection example in *3.2.3* shows sink circuits.
• The ON/OFF polarity differs between when a sink circuit is connected and when a source circuit is connected.

Sink Circuit	Source Circuit
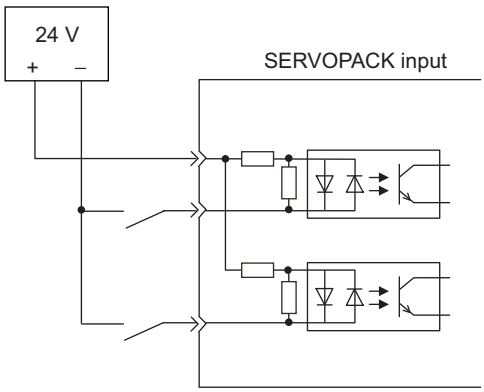	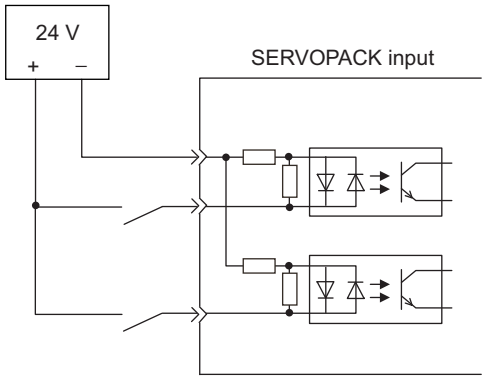

Input Signal Polarities				Input Signal Polarities			
Signal	Level	Voltage Level	Contact	Signal	Level	Voltage Level	Contact
ON	Low (L) level	0 V	Close	ON	High (H) level	24 V	Close
OFF	High (H) level	24 V	Open	OFF	Low (L) level	0 V	Open

(2) Safety Input Circuit

As for wiring input signals for safety function, input signals make common 0 V. It is necessary to make an input signal redundant.

Input Signal Connection Example

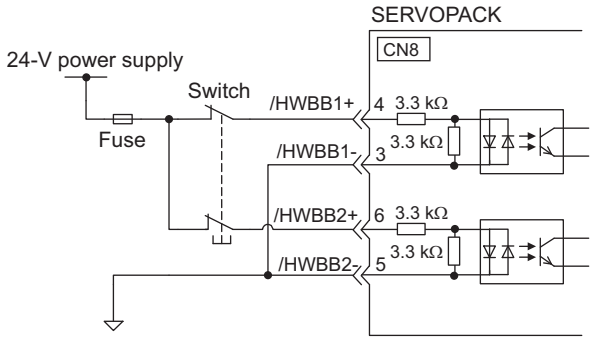

3.4.2 Sequence Output Circuit

Three types of SERVOPACK output circuit are available.

> **IMPORTANT**
>
> Incorrect wiring or incorrect voltage application to the output circuit may cause short-circuit.
>
> If a short-circuit occurs as a result of any of these causes, the holding brake will not work. This could damage the machine or cause an accident resulting in death or injury.

(1) Photocoupler Output Circuit

Photocoupler output circuits are used for servo alarm (ALM), servo ready (/S-RDY), and other sequence output signal circuits. Connect a photocoupler output circuit through a relay or line receiver circuit.

Relay Circuit Example	Line Receiver Circuit Example
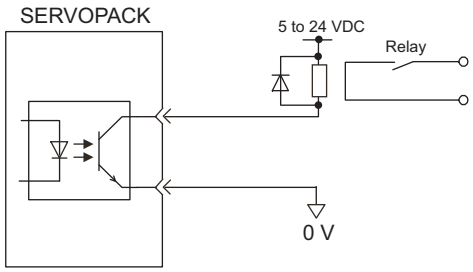	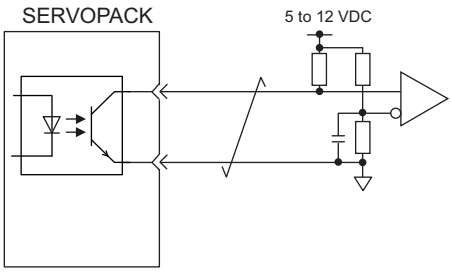

Note: The maximum allowable voltage and the allowable range of current capacity for photocoupler output circuits are as follows.
- Voltage: 30 VDC
- Current: 5 to 50 mA DC

(2) Line Driver Output Circuit

CN1 connector terminals, 17-18 (phase-A signal), 19-20 (phase-B signal), and 21-22 (phase-C signal) are explained below.

These terminals output the following signals via the line-driver output circuits.

- Output signals for which encoder serial data is converted as two phases pulses (PAO, /PAO, PBO, /PBO)
- Origin pulse signals (PCO, /PCO)

Connect the line-driver output circuit through a line receiver circuit at the host controller.

Line Receiver Circuit Example

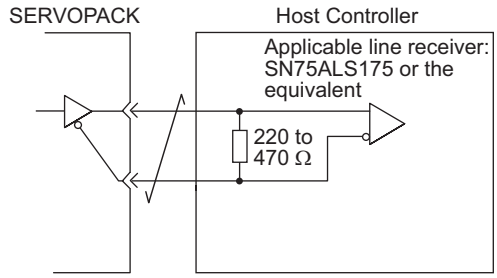

(3) Safety Output Circuit

The external device monitor (EDM1) for safety output signals is explained below.

A configuration example for the EDM1 output signal is shown in the following diagram.

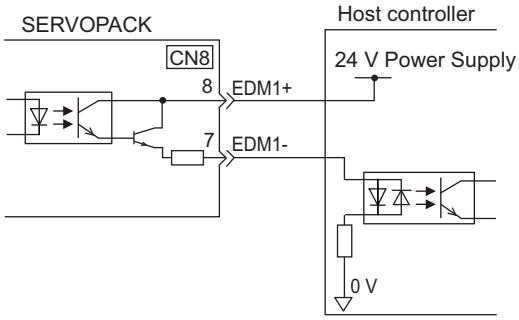

■ Specifications

Type	Signal Name	Pin No.	Output Status	Meaning
Output	EDM1	CN8-8 CN8-7	ON	Both the /HWBB1 and /HWBB2 signals are working normally.
			OFF	The /HWBB1 signal, the /HWBB2 signal, or both are not working normally.

Electrical characteristics of EDM1 signal are as follows.

Items	Characteristic	Remarks
Maximum Allowable Voltage	30 VDC	–
Maximum Current	50 mADC	–
Maximum Voltage Drop at ON	1.0 V	Voltage between EDM1+ to EDM1- at current is 50 mA.
Maximum Delay Time	20 ms	Time from the change in /HWBB1 or /HWBB2 until the change in EDM1.

3.5 Wiring MECHATROLINK-III Communications

The following diagram shows an example of connections between a host controller and a SERVOPACK. Connect the MECHATROLINK-III communications cables to the CN6A and CN6B on the SERVOPACK as shown below.

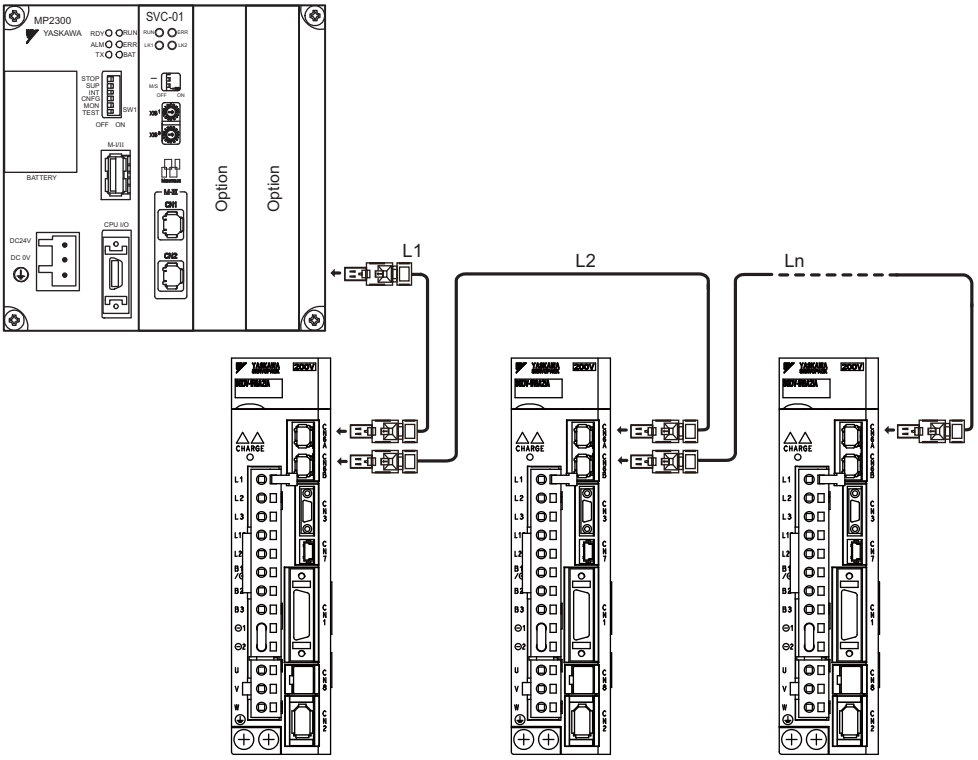

Note: The length of the cable between stations (L1, L2 ... Ln) must be 75 m maximum.

For removing the MECHATROLINK-III communications cable connectors from the SERVOPACK, refer to the following procedure.
Slide the lock injector of the connector to the SERVOPACK side to unlock and remove the MECHATROLINK-III communications cable connectors.

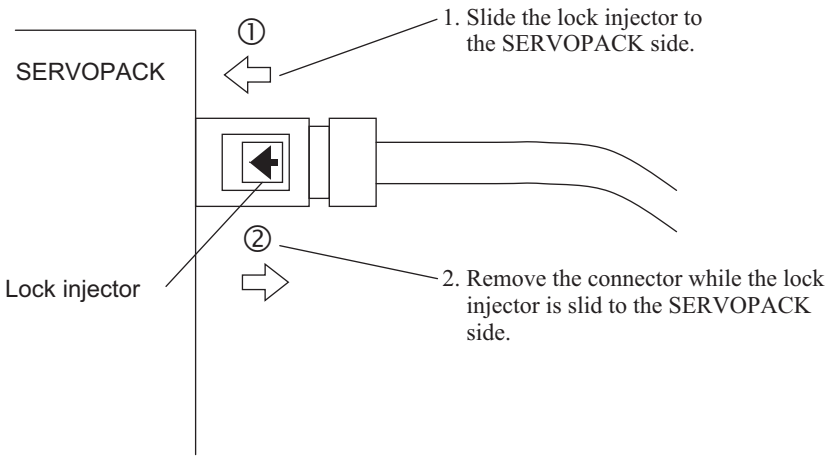

Note: The MECHATROLINK-III communications cable connector may be damaged if it is removed without being unlocking.

3.6 Encoder Connection

This section describes the encoder signal (CN2) names, functions, and connection examples.

3.6.1 Encoder Signal (CN2) Names and Functions

The following table shows the names and functions of encoder signals (CN2).

Signal Name	Pin No.	Function
PG 5 V	1	Encoder power supply +5 V
PG 0 V	2	Encoder power supply 0 V
BAT (+)*	3	Battery (+)
BAT (-)*	4	Battery (-)
PS	5	Serial data (+)
/PS	6	Serial data (-)
Shield	Shell	–

∗ These do not need to be connected for an incremental encoder.

3.6.2 Encoder Connection Examples

The following diagrams show connection examples of the encoder, the SERVOPACK, and the host controller.

(1) Incremental Encoder

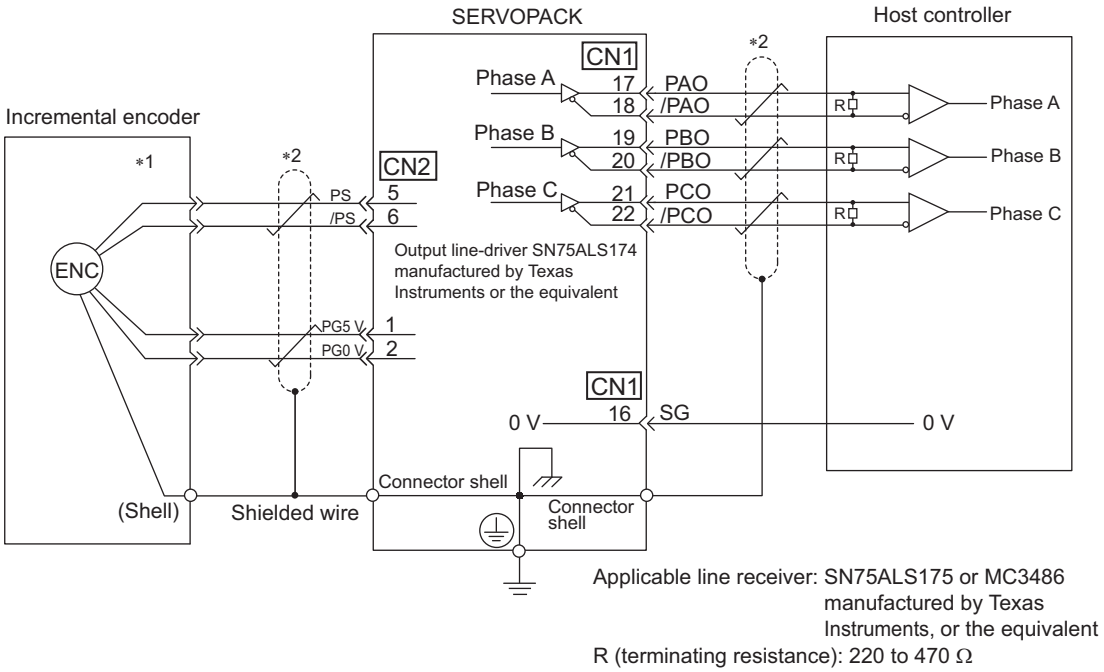

∗1. The pin arrangement for wiring connectors varies in accordance with the servomotor that is used.

∗2. : represents shielded twisted-pair wires.

(2) Absolute Encoder

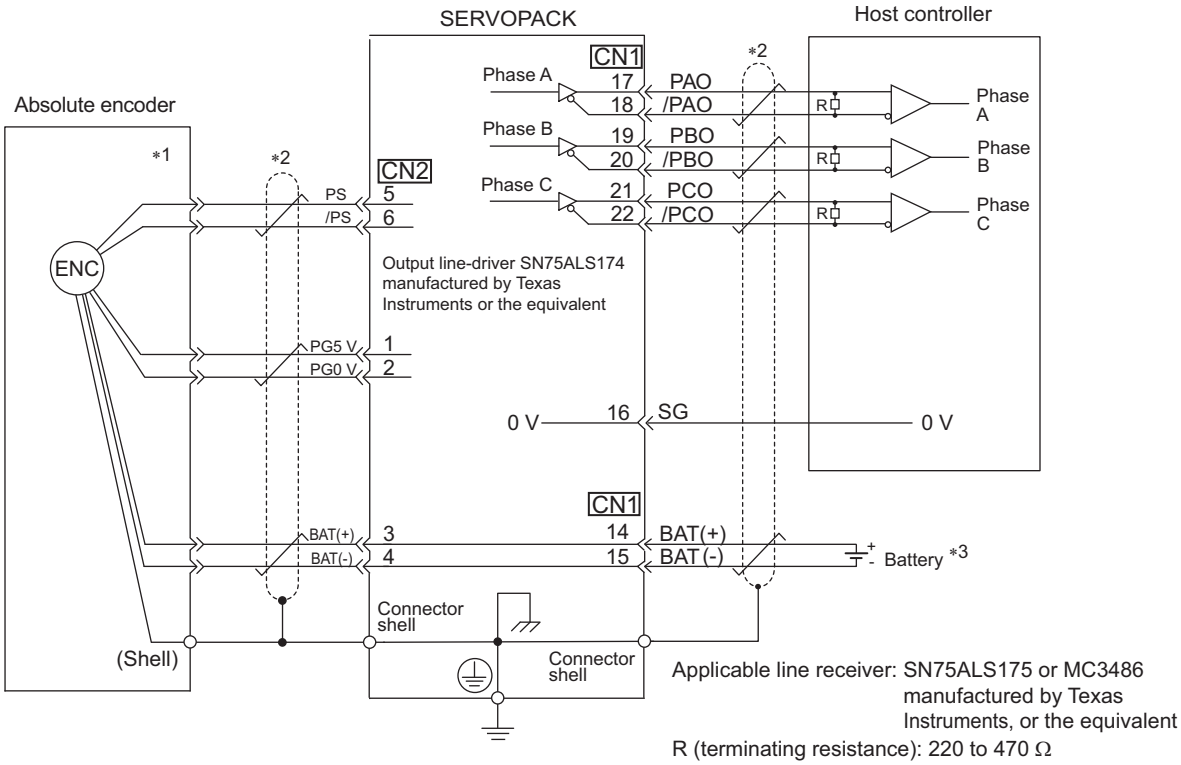

*1. The pin arrangement for wiring connectors varies in accordance with the servomotor that is used.

*2. : represents shielded twisted-pair wires.

*3. When using an absolute encoder, provide power by installing an encoder cable with a JUSP-BA01-E Battery Case or install a battery on the host controller.

3.7 Connecting Regenerative Resistors

If the built-in regenerative resistor is insufficient, connect an external regenerative resistor by one of the following methods and set the regenerative resistor capacity (Pn600). As for precautions on selecting a regenerative resistor and its specifications, refer to *Σ-V Series Product Catalog* (No.: KAEP S800000 42).

⚠ WARNING

- Be sure to connect the regenerative resistor correctly. Do not short-circuit between B1/⊕ and B2.
  Doing so may result in fire or damage to the regenerative resistor or SERVOPACK.

3.7.1 Connecting Regenerative Resistors

The following instructions show how to connect the regenerative resistors and SERVOPACKs.

(1) SERVOPACKs: Model SGDV-R70F, -R90F, -2R1F, -2R8F, -R70A, -R90A, -1R6A, -2R8A

Connect an external regenerative resistor between the B1/⊕ and B2 terminals on the SERVOPACK. After connecting a resistor, select the capacity. For more information on how to set the capacity of regenerative resistors, refer to *3.7.2 Setting Regenerative Resistor Capacity*.

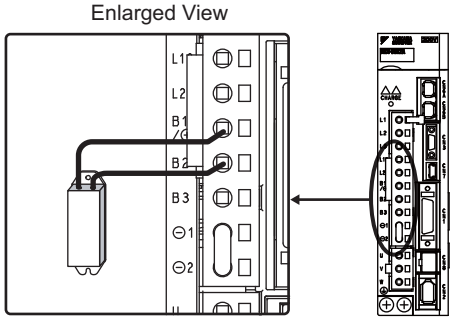

(2) SERVOPACKs: Model SGDV-3R8A, -5R5A, -7R6A, -120A, -180A, -200A, -330A, -1R9D, -3R5D, -5R4D, -8R4D, -120D, -170D

Disconnect the wiring between the SERVOPACK's B2 and B3 terminals and connect an external regenerative resistor between the B1/⊕ and B2 terminals. After connecting the resistor, select the capacity. For more information on how to set the capacity of regenerative resistors, refer to *3.7.2 Setting Regenerative Resistor Capacity*.

Note: Be sure to take out the lead wire between the B2 and B3 terminals.

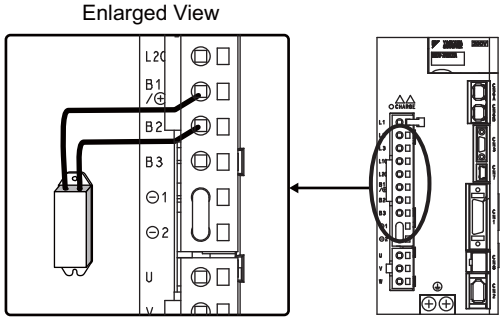

(3) SERVOPACKs: Model SGDV-470A, -550A, -590A, -780A, -210D, -260D, -280D, -370D

No built-in regenerative resistor is provided, so the external regenerative resistor is required. The regenerative resistor units are as follows:

Note: The regenerative resistor unit is constructed from a number of resistors.

Main Circuit Power Supply	Applicable SERVOPACK Model SGDV-	Applicable Regenerative Resistor Unit	Resis-tance (Ω)	Specifications
Three-phase 200 V	470A	JUSP-RA04-E	6.25	Four 25 Ω (220 W) resistors are connected in parallel.
	550A, 590A, 780A	JUSP-RA05-E	3.13	Eight 25 Ω (220 W) resistors are connected in parallel.
Three-phase 400 V	210D, 260D	JUSP-RA18-E	18	Two series of two 18 Ω (220 W) resistors each are connected in parallel.
	280D, 370D	JUSP-RA19-E	14.25	Four series of two 28.5 Ω (220 W) resistors each are connected in parallel.

Connect the B1/⊕ and B2 terminals of the SERVOPACK to the R1 and R2 terminals of the regenerative resistor unit.

When using a regenerative resistor unit, leave Pn600 at its factory setting. Set Pn600 when using a non-YASKAWA external regenerative resistor.

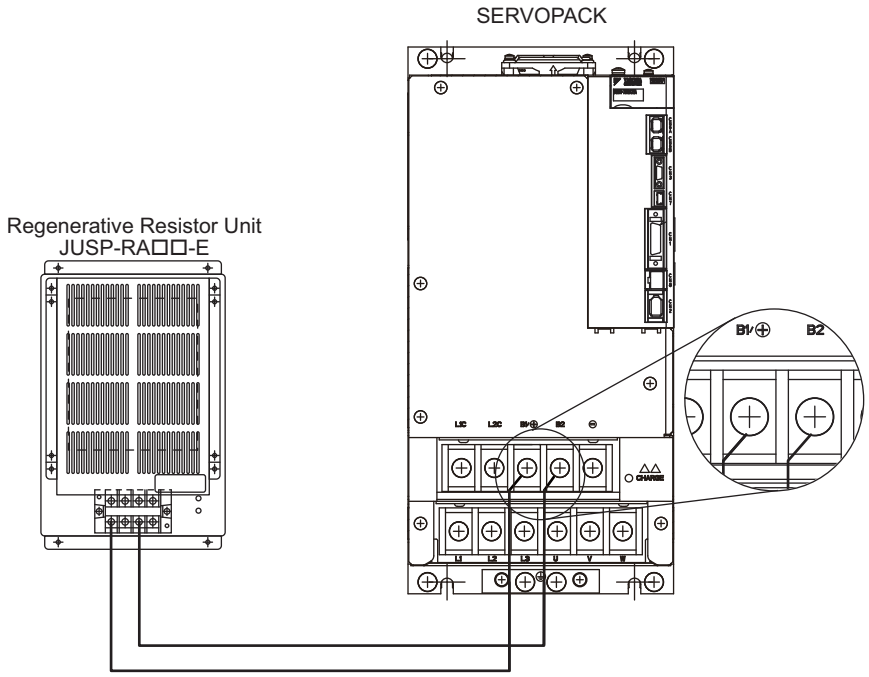

3.7.2 Setting Regenerative Resistor Capacity

When using an external regenerative resistor, set the Pn600 so that the regenerative resistor capacity is equivalent to the resistor capacity.

⚠ WARNING

- If parameter Pn600 is set to 0 while an external regenerative resistor is connected, the regenerative overload alarm (A.320) may not be detected. If the regenerative overload alarm (A.320) is not detected correctly, the external regenerative resistor may be damaged and an injury or fire may result.

Pn600	Regenerative Resistor Capacity			Speed Position Torque	Classification
	Setting Range	Unit	Factory Setting	When Enabled	
	0 to SERVOPACK capacity	10 W	0	Immediately	Setup

Be sure to set the regenerative resistor capacity (Pn600) to a value that is in accordance with the allowable capacity of the actual external regenerative resistor being used.

Note 1. If Pn600 is not set to the optimum value, alarm A.320 will occur.
2. When set to the factory setting (Pn600 = 0), the SERVOPACK's built-in resistor or Yaskawa's regenerative resistor unit has been used.

The setting will vary with the cooling method of external regenerative resistor:

- For natural convection cooling: Set the value to a maximum 20% of the actually installed regenerative resistor capacity (W).
- For forced convection cooling: Set the value to a maximum 50% of the actually installed regenerative resistor capacity (W).

Example: Set 20 W (100 W × 20%) for the 100-W external regenerative resistor with natural convection cooling method:
Pn600 = 2 (unit: 10 W)

IMPORTANT

- When the external regenerative resistors for power are used at the rated load ratio, the resistor temperature increases to between 200 °C and 300 °C. The resistors must be used at or below the rated values. Check with the manufacturer for the resistor's load characteristics.
- For safety, use the external regenerative resistors with thermoswitches.

3.8 Noise Control and Measures for Harmonic Suppression

This section describes the wiring for noise control and the DC reactor for harmonic suppression.

3.8.1 Wiring for Noise Control

IMPORTANT

- Because the SERVOPACK is designed as an industrial device, it provides no mechanism to prevent noise interference.
- The SERVOPACK uses high-speed switching elements in the main circuit. Therefore peripheral devices may receive switching noise. If the equipment is to be used near private houses or if radio interference is a problem, take countermeasures against noise.
- If installation conditions by the EMC directive must be met, refer to *2.4 EMC Installation Conditions in Σ-V Series User's Manual Setup Rotational Motor* (No.: SIEP S800000 43).

The SERVOPACK uses microprocessors. Therefore it may receive switching noise from peripheral devices.

To prevent the noise from the SERVOPACK or the peripheral devices from causing a malfunction of any one of these devices, take the following precautions against noise as required.

- Position the input reference device and noise filter as close to the SERVOPACK as possible.
- Always install a surge absorber in the relay, solenoid and electromagnetic contactor coils.
- Do not bundle or run the main circuit cables together with the I/O signal cables or the encoder cables in the same duct. Keep the main circuit cables separated from the I/O signal cables and the encoder cables with a gap of at least 30 cm.
- Do not share the power supply with an electric welder or electrical discharge machine. When the SERVOPACK is placed near a high-frequency generator, install a noise filter on the input side of the main circuit power supply cables and control power supply cables. As for the wiring of noise filter, refer to *(1) Noise Filter* shown below.
- Take the grounding measures correctly. As for the grounding, refer to *(2) Correct Grounding*.

(1) Noise Filter

The SERVOPACK has a built-in microprocessor (CPU), so protect it from external noise as much as possible by installing a noise filter in the appropriate place.

The following is an example of wiring for noise control.

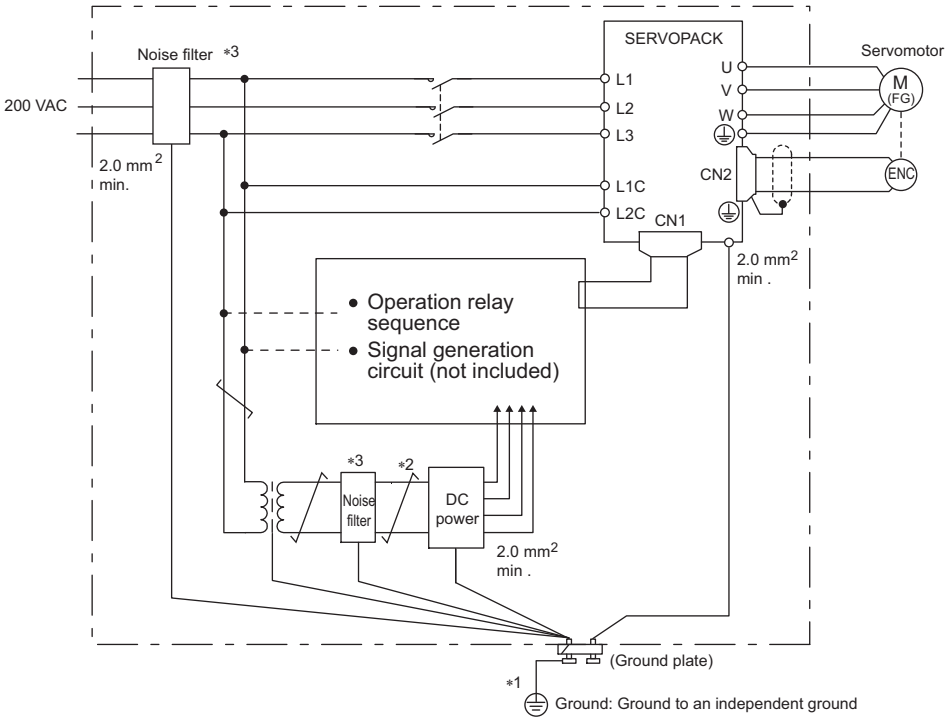

*1. For ground wires connected to the ground plate, use a thick wire with a thickness of at least 2.0 mm^2 (preferably, plain stitch cooper wire).

*2. should be twisted-pair wires.

*3. When using a noise filter, follow the precautions in *3.8.2 Precautions on Connecting Noise Filter*.

(2) Correct Grounding

Take the following grounding measures to prevent the malfunction due to noise.

■ Grounding the Motor Frame

Always connect servomotor frame terminal FG to the SERVOPACK ground terminal ⏚. Also be sure to ground the ground terminal ⏚.

If the servomotor is grounded via the machine, a switching noise current will flow from the SERVOPACK main circuit through servomotor stray capacitance. The above grounding is required to prevent the adverse effects of switching noise.

■ Noise on the I/O Signal Cable

If the I/O signal cable receives noise, ground the 0 V line (SG) of the I/O signal cable. If the servomotor main circuit cable is accommodated in a metal conduit, ground the conduit and its junction box. For all grounding, ground at one point only.

3.8.2 Precautions on Connecting Noise Filter

This section describes the precautions on installing a noise filter.

(1) Noise Filter Brake Power Supply

Use the following noise filter at the brake power input for 400-W or less servomotors with holding brakes.

MODEL: FN2070-6/07 (Manufactured by SCHAFFNER Electronic.)

(2) Precautions on Using Noise Filters

Always observe the following installation and wiring instructions.

IMPORTANT	Some noise filters have large leakage currents. The grounding measures taken also affects the extent of the leakage current. If necessary, select an appropriate leakage current detector or leakage current breaker taking into account the grounding measures that are used and leakage current from the noise filter. Contact the manufacturer of the noise filter for details.

Do not put the input and output lines in the same duct or bundle them together.

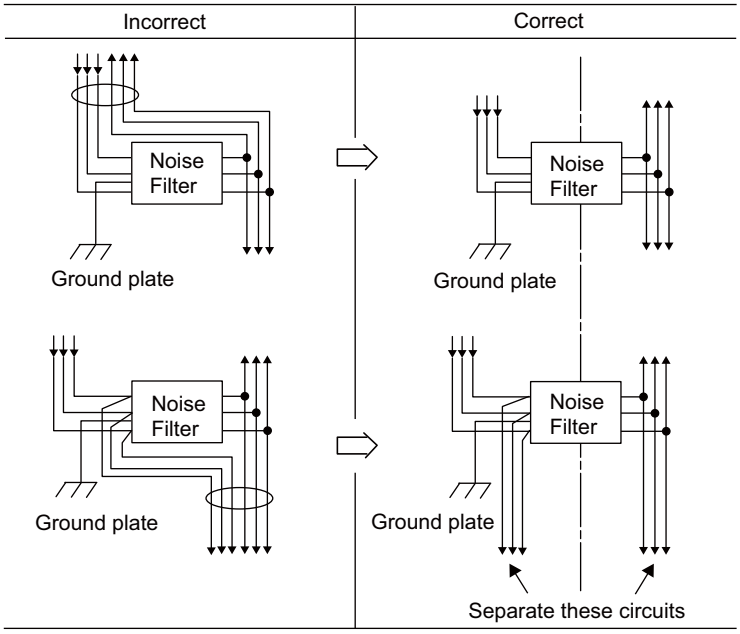

Separate the noise filter ground wire from the output lines.
Do not accommodate the noise filter ground wire, output lines and other signal lines in the same duct or bundle them together.

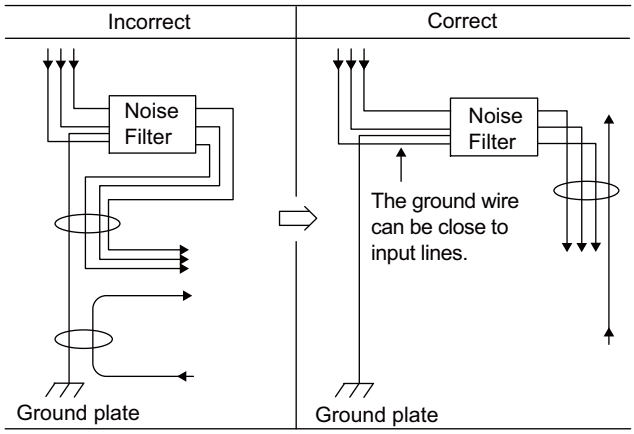

Connect the noise filter ground wire directly to the ground plate.
Do not connect the noise filter ground wire to other ground wires.

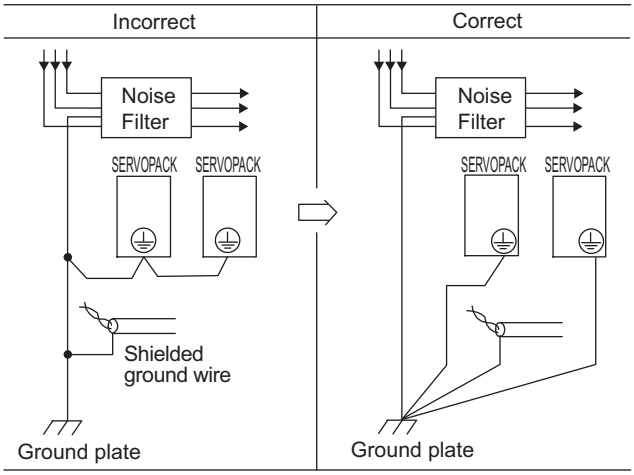

If a noise filter is located inside a control panel, first connect the noise filter ground wire and the ground wires from other devices inside the control panel to the ground plate for the control panel, then ground the plates.

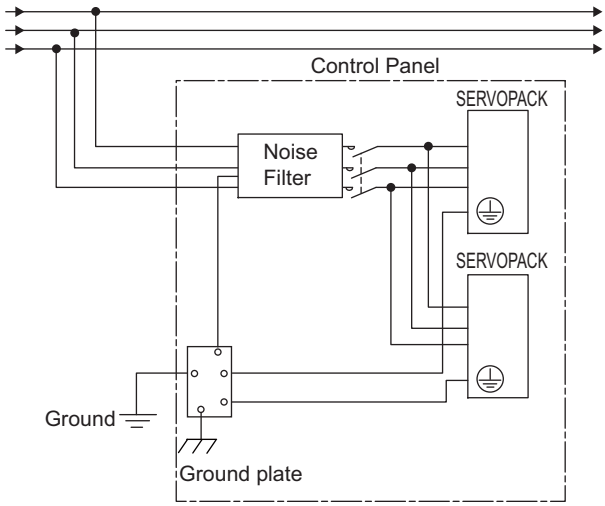

3.8.3 Connecting a Reactor for Harmonic Suppression

The SERVOPACK has reactor connection terminals for power supply harmonic suppression that can be used as required. Refer to *Σ-V Series Product Catalog* (No.: KAEP S800000 42) for precautions on selecting an AC or DC reactor and its specifications.

Connect a reactor as shown in the following diagram.

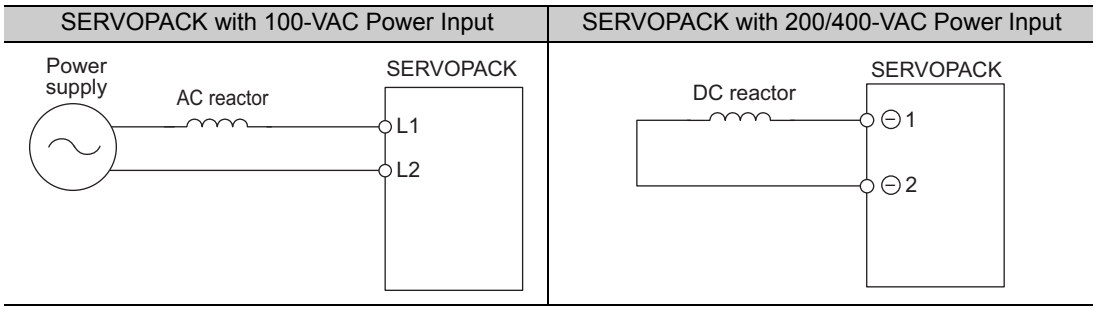

Note 1. Connection terminals for DC reactor ⊖1 and ⊖2 are short-circuited at shipment. Remove the lead wire for short-circuit, and connect a DC reactor.
2. Reactors are not included. (Sold separately.)
3. DC reactors cannot be connected to SERVOPACKs with a single-phase 100-V power input.

4

Operation

4.1 MECHATROLINK-III Communications Settings 4-3
4.1.1 Setting Switches S1, S2, and S3 4-3

4.2 MECHATROLINK-III Commands 4-4

4.3 Basic Functions Settings 4-4
4.3.1 Servomotor Rotation Direction 4-4
4.3.2 Overtravel 4-5
4.3.3 Software Limit Settings 4-8
4.3.4 Holding Brakes 4-9
4.3.5 Stopping Servomotors after SV_OFF Command or Alarm Occurrence 4-14
4.3.6 Instantaneous Power Interruption Settings 4-16
4.3.7 SEMI F47 Function
(Torque Limit Function for Low DC Power Supply Voltage for Main Circuit) 4-17
4.3.8 Setting Motor Overload Detection Level 4-20

4.4 Trial Operation 4-22
4.4.1 Inspection and Checking before Trial Operation 4-22
4.4.2 Trial Operation via MECHATROLINK-III 4-23
4.4.3 Electronic Gear 4-24
4.4.4 Encoder Output Pulses 4-26
4.4.5 Setting Encoder Output Pulse 4-27

4.5 Test Without Motor Function 4-28
4.5.1 Motor Information 4-28
4.5.2 Motor Position and Speed Responses 4-29
4.5.3 Limitations 4-30
4.5.4 Digital Operator Displays during Testing without Motor 4-31

4.6 Limiting Torque 4-32
4.6.1 Internal Torque Limit 4-32
4.6.2 External Torque Limit 4-33
4.6.3 Checking Output Torque Limiting during Operation 4-34

4.7 Absolute Encoders 4-35
4.7.1 Connecting the Absolute Encoder 4-36
4.7.2 Absolute Data Request (SENS ON Command) 4-38
4.7.3 Battery Replacement 4-39
4.7.4 Absolute Encoder Setup and Reinitialization 4-41
4.7.5 Absolute Data Reception Sequence 4-42
4.7.6 Multiturn Limit Setting 4-47
4.7.7 Multiturn Limit Disagreement Alarm (A.CC0) 4-48
4.7.8 Absolute Encoder Origin Offset 4-49

4.8 Other Output Signals 4-50
4.8.1 Servo Alarm Output Signal (ALM) 4-50
4.8.2 Warning Output Signal (/WARN) 4-50
4.8.3 Rotation Detection Output Signal (/TGON) 4-51
4.8.4 Servo Ready Output Signal (/S-RDY) 4-51
4.8.5 Speed Coincidence Output Signal (/V-CMP) 4-52
4.8.6 Positioning Completed Output Signal (/COIN) 4-53
4.8.7 Positioning Near Output Signal (/NEAR) 4-54
4.8.8 Speed Limit Detection Signal (/VLT) 4-55

4.9 Safety Function 4-57
4.9.1 Hard Wire Base Block (HWBB) Function 4-57
4.9.2 External Device Monitor (EDM1) 4-63
4.9.3 Application Example of Safety Functions 4-65
4.9.4 Confirming Safety Functions 4-66
4.9.5 Connecting a Safety Function Device 4-67
4.9.6 Precautions for Safety Functions 4-69

4.1 MECHATROLINK-III Communications Settings

This section describes the switch settings necessary for MECHATROLINK-III communications.

4.1.1 Setting Switches S1, S2, and S3

The DIP switch S3 is used to make the settings for MECHATROLINK-III communications.

The station address is set using the rotary switches S1 and S2.

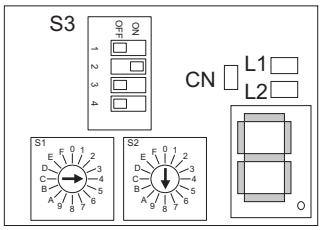

(1) Settings of the Rotary Switches S1 and S2

Set the station address using the rotary switches S1 and S2.

Station Address	S1	S2
00H to 02H: Disabled (Do not use these addresses.)	0	0 to 2
03H (Factory setting)	0	3
04H	0	4
• • •		
EFH	E	F
F0H to FFH: Disabled (Do not use these addresses.)	F	0 to F

(2) Settings of the DIP Switch S3

The following table shows the settings of the DIP switch (S3).

S3	Function	Setting			Factory setting
Pins 1 and 2	Sets the number of transmission bytes.	1	2	Number of transmission bytes	1: OFF 2: ON
		OFF	OFF	16 byte	
		ON	OFF	32 byte	
		OFF	ON	48 byte	
		ON	ON	Reserved. (Do not use this setting.)	
Pin 3	Reserved. (Do not change.)				OFF
Pin 4	Reserved. (Do not change.)				OFF

IMPORTANT

- When using the MECHATROLINK-III standard servo profile, set the number of transmission bytes to either 32 or 48.
- When using the MECHATROLINK-II-compatible profile, set the number of transmission bytes to either 16 or 32.
- Turn the power OFF and then ON again to enable the new settings.

4.2 MECHATROLINK-III Commands

For information on the MECHATROLINK-III commands, refer to *Σ-V Series User's Manual MECHATROLINK-III Standard Servo Profile Commands* (No: SIEP S800000 63).

4.3 Basic Functions Settings

4.3.1 Servomotor Rotation Direction

The servomotor rotation direction can be reversed with parameter Pn000.0 without changing the polarity of the speed/position reference. This causes the rotation direction of the servomotor to change, but the polarity of the signal, such as encoder output pulses, output from the SERVOPACK does not change. (refer to *4.4.4 Encoder Output Pulses*)

The standard setting for forward rotation is counterclockwise (CCW) as viewed from the load end of the servomotor.

Parameter		Forward/ Reverse Reference	Direction of Motor Rotation and Encoder Output Pulse	Applicable Overtravel (OT)
Pn000	n.□□□0 Sets CCW as forward direction. [Factory setting]	Forward Reference	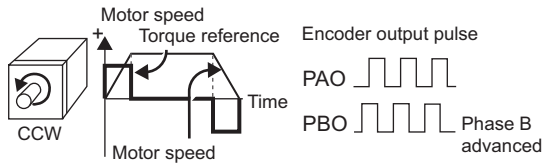	P-OT
		Reverse Reference	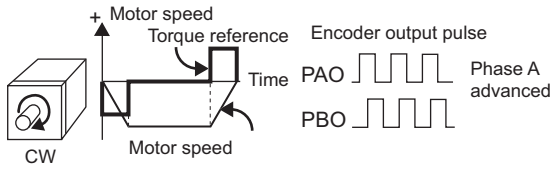	N-OT
	n.□□□1 Sets CW as forward direction. (Reverse Rotation Mode)	Forward Reference	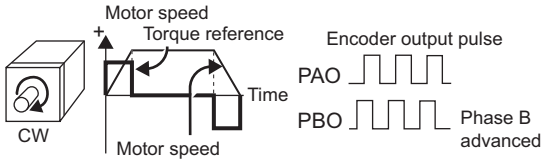	P-OT
		Reverse Reference	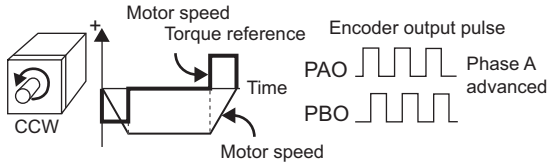	N-OT

Note: SigmaWin+ trace waveforms are shown in the above table.

4.3.2 Overtravel

The overtravel limit function forces movable machine parts to stop if they exceed the allowable range of motion and turn ON a limit switch.

For rotating application such as disc table and conveyor, overtravel function is not necessary. In such a case, no wiring for overtravel input signals is required.

⚠ CAUTION

- Installing limit switches
  For machines that move using linear motion, connect limit switches to P-OT and N-OT of CN1 as shown below to prevent machine damage. To prevent a contact fault or disconnection from causing accidents, make sure that the limit switches are normally closed.

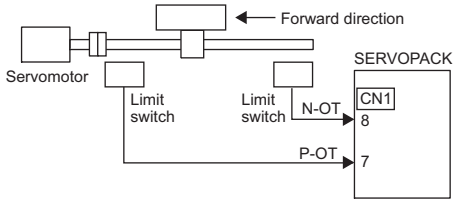

- Axes to which external force is applied in overtravel
  Vertical axes:
  Occurrence of overtravel may cause a workpiece to fall, because the /BK signal is on, that is when the brake is released. Set the parameter (Pn001 = n.□□1□) to bring the servomotor to zero clamp state after stopping to prevent a workpiece from falling.
  Other axes to which external force is applied:
  Overtravel will bring about a baseblock state after the servomotor stops, which may cause the servomotor to be pushed back by the load's external force. To prevent this, set the parameter (Pn001 = n.□□1□) to bring the servomotor to zero clamp state after stopping.
  For details on how to set the parameter, refer to *(3) Servomotor Stopping Method When Overtravel is Used*.

(1) Signal Setting

Type	Name	Connector Pin Number	Setting	Meaning
Input	P-OT	CN1-7	ON	Forward run allowed. Normal operation status.
			OFF	Forward run prohibited. Forward overtravel.
	N-OT	CN1-8	ON	Reverse run allowed. Normal operation status.
			OFF	Reverse run prohibited. Reverse overtravel.

Rotation in the opposite direction is possible during overtravel by inputting the reference.

(2) Overtravel Function Setting

Parameters Pn50A and Pn50B can be set to enable or disable the overtravel function.

If the overtravel function is not used, no wiring for overtravel input signals will be required.

Parameter		Meaning	When Enabled	Classification
Pn50A	n.1□□□ [Factory setting]	Inputs the Forward Run Prohibited (P-OT) signal from CN1-7.	After restart	Setup
	n.8□□□	Disables the Forward Run Prohibited (P-OT) signal. Allows constant forward rotation.		
Pn50B	n.□□□2 [Factory setting]	Inputs the Reverse Run Prohibited (N-OT) signal from CN1-8.		
	n.□□□8	Disables the Reverse Run Prohibited (N-OT) signal. Allows constant reverse rotation.		

A parameter can be used to re-allocate input connector number for the P-OT and N-OT signals. Refer to *3.3.1 Input Signal Allocations* for details.

(3) Servomotor Stopping Method When Overtravel is Used

There are three servomotor stopping methods when an overtravel is used.

- Dynamic brake
  By short-circuiting the electric circuits, the servomotor comes to a quick stop.
- Decelerate to a stop
  Stops by using emergency stop torque.
- Coast to a stop
  Stops naturally, with no control, by using the friction resistance of the servomotor in operation.

After servomotor stopping, there are two modes.

- Coast mode
  Stopped naturally, with no control, by using the friction resistance of the servomotor in operation.
- Zero clamp mode
  A mode forms a position loop by using the position reference zero.

The servomotor stopping method when an overtravel (P-OT, N-OT) signal is input while the servomotor is operating can be set with parameter Pn001.

Parameter		Stop Method	Mode After Stopping	When Enabled	Classification
Pn001	n.□□00 [Factory setting]	DB	Coast	After restart	Setup
	n.□□01				
	n.□□02	Coast			
	n.□□1□	Deceleration to a stop	Zero clamp		
	n.□□2□		Coast		

- A servomotor under torque control cannot be decelerated to a stop. The servomotor is stopped with the dynamic braking (DB) or coasts to a stop according to the setting of Pn001.0. After the servomotor stops, the servomotor will enter a coast state.
- For details on servomotor stopping methods after the SV_OFF command is received or an alarm occurs, refer to *4.3.5 Stopping Servomotors after SV_OFF Command or Alarm Occurrence*.

■ When Servomotor Stopping Method is Set to Decelerate to Stop

Emergency stop torque can be set with Pn406.

Pn406	Emergency Stop Torque			Speed Position Torque	Classification
	Setting Range	Setting Unit	Factory Setting	When Enabled	
	0 to 800	1%	800	Immediately	Setup

- The setting unit is a percentage of the rated torque.
- The factory setting is 800% so that the setting is large enough a value to operate the servomotor at maximum torque. The maximum value of emergency stop torque that is actually available, however, is limited to the maximum torque of the servomotor.

(4) Overtravel Warning Function

This function detects an overtravel warning (A.9A0) if overtravel occurs while the servomotor power is ON. Using this function enables notifying the host controller when the SERVOPACK detects overtravel even if the overtravel signal is ON only momentarily.

To use the overtravel warning function, set digit 4 of Pn00D to 1 (detects overtravel warning).

Note: The overtravel warning function is supported by software version 001A or later. The software version can be checked with Fn012. For details, refer to *6.14 Software Version Display (Fn012)*.

■ Warning Output Timing

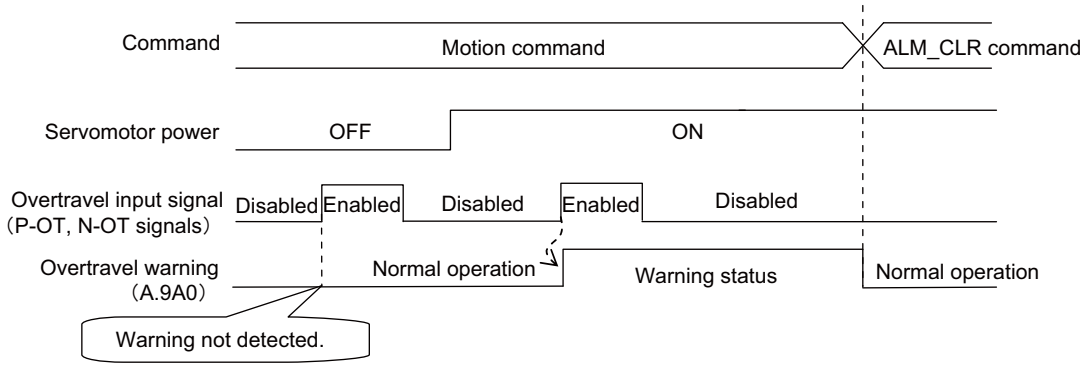

<Notes>

- Warnings are detected for overtravel in the same direction as the reference.
- Warnings are not detected for overtravel in the reverse direction from the reference.
  Example:A warning will not be output for a forward reference even if the N-OT signal (reverse run prohibited) turns ON.
- A warning can be detected in either the forward or reverse direction, when there is no reference.
- A warning will not be detected when the servomotor power is OFF even if overtravel occurs.
- A warning will not be detected when the servomotor power changes from OFF to ON even if overtravel status exists.
- To clear the overtravel warning, send a Clear Warning or Alarm command (ALM_CLR) regardless of the status of the servomotor power and the overtravel signal. If the warning is cleared by this method during an overtravel state, the occurrence of the warning will not be indicated until the overtravelling is corrected and reset.
- The overtravel warning will be detected when the software limit is in effect.

⚠ CAUTION

- The overtravel warning function only detects warnings. It does not affect on stopping for overtravel or motion operations at the host controller. The next step (e.g., the next motion or other command) can be executed even if an overtravel warning exists. However, depending on the processing specifications and programming for warnings in the host controller, operation may be affected when an overtravel warning occurs (e.g., motion may stop or not stop). Confirm the specifications and programming in the host controller.
- When an overtravel occurs, the SERVOPACK will perform stop processing for overtravel. Therefore, when an overtravel warning occurs, the servomotor may not reach the target position specified by the host controller. Check the feedback position to make sure that the axis is stopped at a safe position.

■ Related Parameter

Parameter		Meaning	When Enabled	Classification
Pn00D	n.0□□□ [Factory setting]	Does not detect overtravel warning.	Immediately	Setup
	n.1□□□	Detects overtravel warning.		

4.3.3 Software Limit Settings

The software limits set limits in software for machine movement that do not use the overtravel signals (P-OT and N-OT). If a software limit is exceeded, an emergency stop will be executed in the same way as it is for overtravel.

(1) Software Limit Function

The software limit function can be enabled or disabled.

Use the parameter Pn801.0 to enable the software limit function.

The software limit function can be enabled under the following conditions. Under all other circumstances, the software limits will not be enabled even if a software limit is exceeded.

- The ZRET command has been executed.
- REFE = 1 using the POS_SET command.

Enable or disable the software limits using one of the following settings.

Parameter		Description	When Enabled	Classification
Pn801	n.□□□0	Software limits enabled in both direction.	Immediately	Setup
	n.□□□1	Forward software limit enabled.		
	n.□□□2	Reverse software limit enabled.		
	n.□□□3 [Factory setting]	Both software limits disabled.		

(2) Software Limit Check using References

Enable or disable software limit checks when target position references such as POSING or INTERPOLATE are input. When the input target position exceeds the software limit, a deceleration stop will be performed from the software limit set position.

Parameter		Description	When Enabled	Classification
Pn801	n.□0□□ [Factory setting]	No software limit check using references.	Immediately	Setup
	n.□1□□	Software limit check using references.		

(3) Software Limit Setting

Set software limits value in the positive and negative directions.

Because the limit zone is set according to the forward or reverse direction, the reverse limit must be less than the forward limit.

Pn804	Forward Software Limit			Position	Classification
	Setting Range	Setting Unit	Factory Setting	When Enabled	
	-1073741823 to 1073741823	1 Reference Unit	819191808	Immediately	Setup
Pn806	Reverse Software Limit			Position	Classification
	Setting Range	Setting Unit	Factory Setting	When Enabled	
	-1073741823 to 1073741823	1 Reference Unit	-819191808	Immediately	Setup

4.3.4 Holding Brakes

A holding brake is a brake used to hold the position of the movable part of the machine when the SERVO-PACK is turned OFF so that movable part does not move due to gravity or external forces. Holding brakes are built into servomotors with brakes.

The holding brake is used in the following cases.

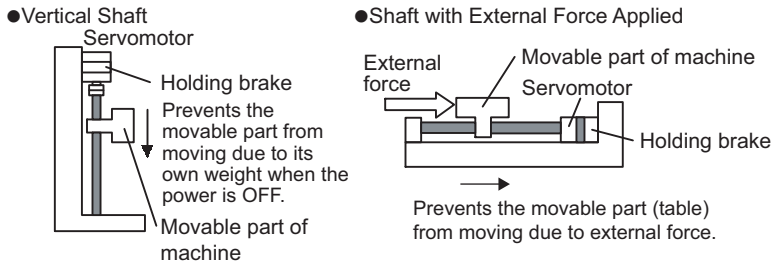

> **IMPORTANT**
> - The brake built into the servomotor with brakes is a de-energization brake, which is used only to hold and cannot be used for braking. Use the holding brake only to hold a stopped servomotor.

There is a delay in the braking operation. Set the following ON/OFF timing.

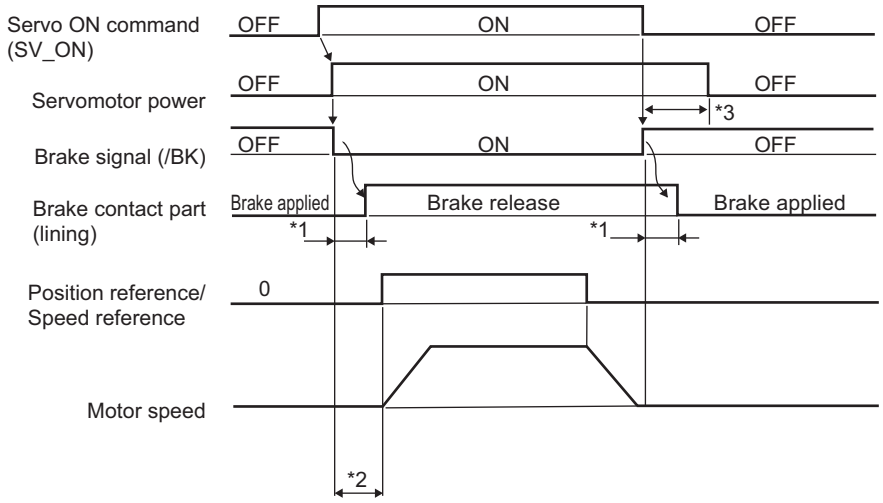

∗1. The operation delay time of the brake depends on the model. For details, refer to *Brake Operation Delay Time* shown below.
∗2. After the SV_ON command has been sent and 50 ms has passed since the brake was released, output the reference from the host controller to the SERVOPACK.
∗3. Use Pn506, Pn507, and Pn508 to set the timing of when the brake will be activated and when the servomotor power will be turned OFF.

Brake Operation Delay Time

Model	Voltage	Brake Release Time (ms)	Brake Applied Time (ms)
SGMJV-A5 to 04	24 VDC	60	100
SGMJV-08		80	100
SGMAV-A5 to 04		60	100
SGMAV-06 to 10		80	100
SGMPS-01, -08		20	100
SGMPS-02, -04, -15		40	100
SGMGV-03 to 20	24 VDC, 90 VDC	100	80
SGMGV-30, -44		170	100 (24 VDC), 80 (90 VDC)
SGMGV-55, -75, -1A		170	80
SGMGV-1E		250	80
SGMSV-10 to 25		170	80
SGMSV-30 to 50		100	80

Note: The above operation delay time is an example when the power supply is turned ON and OFF on the DC side.
Be sure to evaluate the above times on the actual equipment before using the application.

(1) Wiring Example

Use the brake signal (/BK) and the brake power supply to form a brake ON/OFF circuit. The following diagram shows a standard wiring example.

The timing can be easily set using the brake signal (/BK).

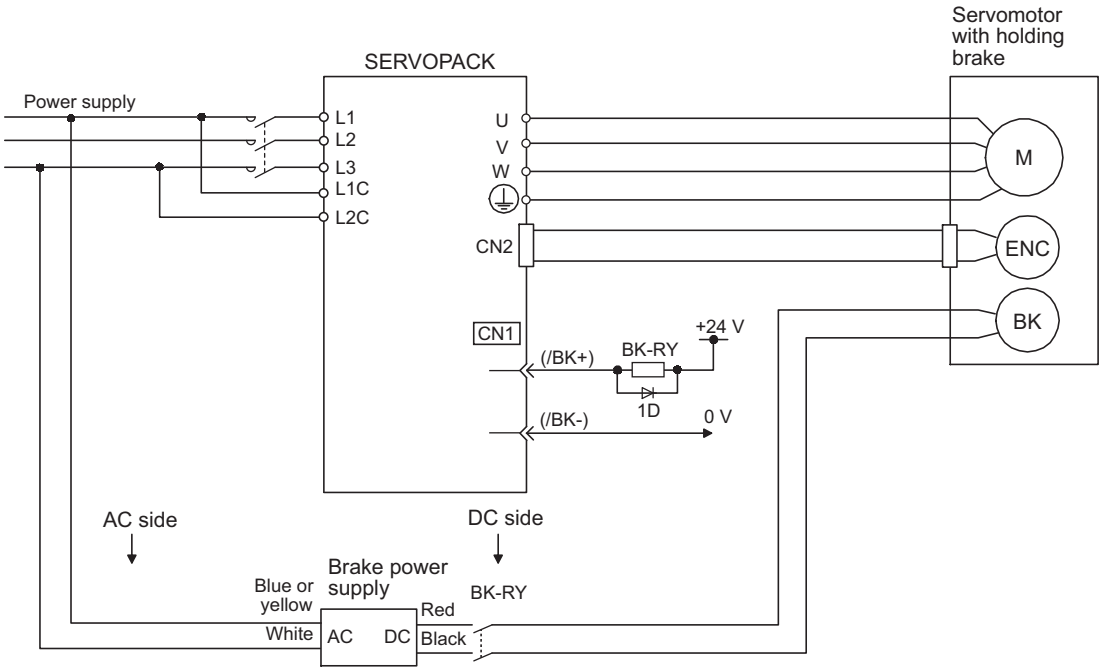

BK-RY: Brake control relay
Brake power supply for 90 V Input voltage 200-V models: LPSE-2H01-E
Input voltage 100-V models: LPDE-1H01-E

A 24 VDC power supply is not included.

IMPORTANT

- Select the optimum surge absorber in accordance with the applied brake current and brake power supply.
  When using the LPSE-2H01-E power supply: Z10D471 (Made by SEMITEC Corporation)
  When using the LPDE-1H01-E power supply: Z10D271 (Made by SEMITEC Corporation)
  When using the 24-V power supply: Z15D121 (Made by SEMITEC Corporation)
- After the surge absorber is connected, check the total time the brake is applied for the system. Depending on the surge absorber, the total time the brake is applied can be changed.
- Configure the relay circuit to apply the holding brake by the emergency stop.

Relay Circuit Example

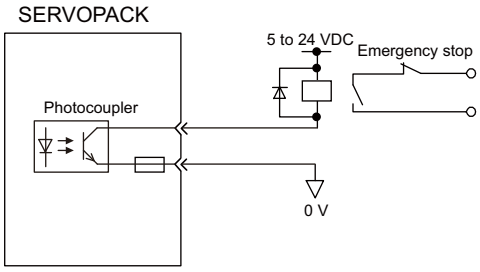

- The allocation of the /BK signal can be changed. Refer to *(3) Brake Signal (/BK) Allocation* to set the parameter Pn50F.
- When using a 24-V brake, separate the 24-VDC power supply from other power supplies, such as the one used for the I/O signals of CN1 connectors. Always install the 24-VDC power supply separately. If the power supply is shared, the I/O signals might malfunction.

(2) Brake Signal (/BK) Setting

This output signal controls the brake. The allocation of the /BK signal can be changed. Refer to *(3) Brake Signal (/BK) Allocation* for allocation.

The /BK signal turns OFF (applies the brake) when an alarm is detected or the SV_OFF command is received. The brake OFF timing can be adjusted with Pn506.

Type	Name	Connector Pin Number	Setting	Meaning
Output	/BK	CN1-1, CN1-2	ON (closed)	Releases the brake.
			OFF (open)	Applies the brake.

IMPORTANT

The /BK signal is still ON during overtravel and the brake is still released.

(3) Brake Signal (/BK) Allocation

Use parameter Pn50F.2 to allocate the /BK signal.

Parameter		Connector Pin Number		Meaning	When Enabled	Classification
		+ Terminal	- Terminal			
Pn50F	n.□0□□	–	–	The /BK signal is not used.	After restart	Setup
	n.□1□□ [Factory setting]	CN1-1	CN1-2	The /BK signal is output from output terminal CN1-1, 2.		
	n.□2□□	CN1-23	CN1-24	The /BK signal is output from output terminal CN1-23, 24.		
	n.□3□□	CN1-25	CN1-26	The /BK signal is output from output terminal CN1-25, 26.		

IMPORTANT

When multiple signals are allocated to the same output terminal, the signals are output with OR logic. For the /BK signal, do not use the output terminal that is already being used for another signal.

(4) Brake ON Timing after the Servomotor Stops

When the servomotor stops, the /BK signal turns OFF at the same time as the SV_OFF command is received. Use parameter Pn506 to change the timing to turn OFF the servomotor power after the SV_OFF command has been received.

Pn506	Brake Reference-Servo OFF Delay Time			Speed Position Torque	Classification
	Setting Range	Setting Unit	Factory Setting	When Enabled	
	0 to 50	10 ms	0	Immediately	Setup

- When using the servomotor to control a vertical axis, the machine movable part may shift slightly depending on the brake ON timing due to gravity or an external force. To eliminate this slight shift, set parameter so that the power to the servomotor turns OFF after the brake is applied.
- This parameter changes the brake ON timing while the servomotor is stopped.

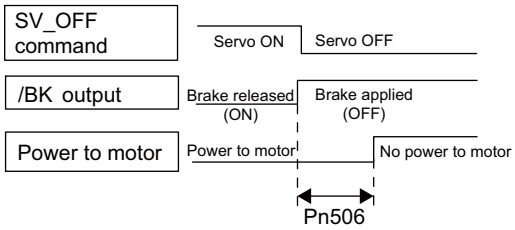

IMPORTANT

The servomotor will turn OFF immediately when an alarm occurs, regardless of the setting of this parameter. The machine movable part may shift due to gravity or external force before the brake operates.

(5) Brake Signal (/BK) Output Timing during Servomotor Rotation

If an alarm occurs while the servomotor is rotating, the servomotor will come to a stop and the brake signal (/BK) will be turned OFF. The timing of brake signal (/BK) output can be adjusted by setting the brake reference output speed level (Pn507) and the waiting time for brake signal when motor running (Pn508).

Note: If the servomotor is set so that it comes to a zero-speed stop for an alarm, follow the information in *(4) Brake ON Timing after the Servomotor Stops* after the servomotor comes to a stop for a zero position reference.

Pn507	Brake Reference Output Speed Level			Speed Position Torque	Classification
	Setting Range	Setting Unit	Factory Setting	When Enabled	
	0 to 10000	1 min^{-1}	100	Immediately	Setup
Pn508	Waiting Time for Brake Signal When Motor Running			Speed Position Torque	Classification
	Setting Range	Setting Unit	Factory Setting	When Enabled	
	10 to 100	10 ms	50	Immediately	Setup

/BK Signal Output Conditions When Servomotor Rotating

The /BK signal goes to high level (brake ON) when either of the following conditions is satisfied:

- When the motor speed falls below the level set in Pn507 after the power to the servomotor is turned OFF.
- When the time set in Pn508 is exceeded after the power to the servomotor is turned OFF.

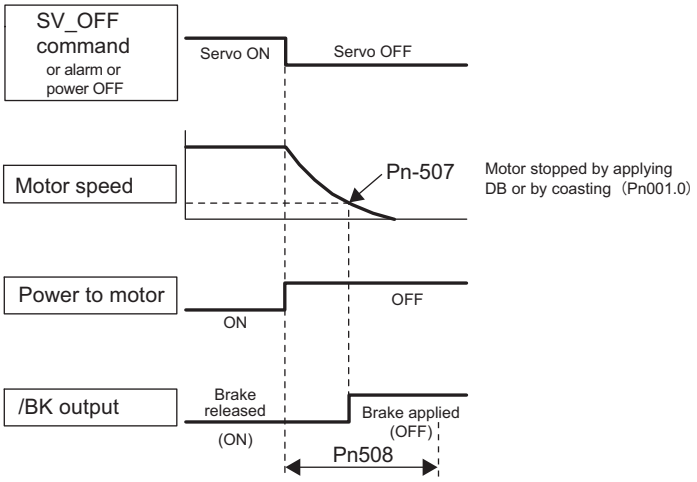

IMPORTANT

- The servomotor will be limited to its maximum speed even if the value set in Pn507 is higher than the maximum speed.
- Do not allocate the rotation detection signal (/TGON) and the brake signal (/BK) to the same terminal. The /TGON signal will otherwise be turned ON by the falling speed on a vertical axis, and the brake may not operate.
  For the /BK signal, do not use the terminal that is already being used for another signal.

4.3.5 Stopping Servomotors after SV_OFF Command or Alarm Occurrence

The servomotor stopping method can be selected after the SV_OFF command is received or an alarm occurs.

IMPORTANT

- Dynamic braking (DB) is used for emergency stops. The DB circuit will operate frequently if the power is turned ON and OFF or the SV_ON command and SV_OFF command are received with a reference input applied to start and stop the servomotor, which may result in deterioration of the internal elements in the SERVOPACK. Use speed input references or position references to start and stop the servomotor.
- If the main circuit power supply or the control power supply is turned OFF but the SV_OFF command has not been received, the stopping method for servomotor cannot be set in the parameters. Use the following method to stop the servomotor.

  If turning OFF the main circuit power supply, but the SV_OFF command has not been received, the servomotor will be stopped by dynamic braking.

  If turning OFF the control power supply, but the SV_OFF command has not been received, the stopping method will vary with the SERVOPACK model. Two stopping methods are available.
  - SERVOPACK models for servomotors that stop by coasting:
    SGDV-330A, -470A, -550A, -590A, -780A, -280D, -370D
  - SERVOPACK models for servomotors that stops by dynamic braking:
    All SERVOPACKs other than those listed for coasting.
- If the servomotor must be stopped by coasting rather than by dynamic braking when the main circuit power supply or the control power supply is turned OFF but the SV_OFF command has not been received, arrange the sequence externally so the current will be cut off for servomotor wires U, V, and W.
- To minimize the coasting distance of the servomotor to come to a stop when an alarm occurs, the zero-speed stopping method is factory-set for alarms to which the zero-speed stop method is applicable. The DB stopping method may be more suitable than the zero-speed stopping method, however, depending on the application.
  For example, for multiple axes coupling operation (a twin-drive operation), machinery damage may result if a zero-speed stop alarm occurs for one of the coupled shafts and the other shaft stops by dynamic brake. In such cases, change the method to the DB stopping method.

(1) Stopping Method for Servomotor after SV_OFF Command is Received

Use Pn001.0 to select the stopping method for the servomotor after the SV_OFF command is received.

Parameter		Stop Mode	Mode After Stopping	When Enabled	Classification
Pn001	n.□□□0 [Factory setting]	DB	DB	After restart	Setup
	n.□□□1		Coast		
	n.□□□2	Coast	Coast		

Note: Similar to the Coast Mode, the n.□□□0 setting (which stops the servomotor by dynamic braking and then holds it in Dynamic Brake Mode) does not generate any braking force when the servomotor stops or when it rotates at very low speed.

(2) Stopping Method for Servomotor When an Alarm Occurs

There are two types of alarms (Gr.1 and Gr.2) that depend on the stopping method when an alarm occurs. Select the stopping method for the servomotor when an alarm occurs using Pn001.0 and Pn00B.1.

The stopping method for the servomotor for a Gr.1 alarm is set to Pn001.0.

The stopping method for the servomotor for a Gr.2 alarm is set to Pn00B.1.

Refer to the information on alarm stopping methods in *9.1.1 List of Alarms*.

■ Stopping Method for Servomotor for Gr.1 Alarms

The stopping method of the servomotor when a Gr.1 alarm occurs is the same as that in *(1) Stopping Method for Servomotor after SV_OFF Command is Received*.

Parameter		Stop Mode	Mode After Stopping	When Enabled	Classification
Pn001	n.□□□0 [Factory setting]	DB	DB	After restart	Setup
	n.□□□1		Coast		
	n.□□□2	Coast	Coast		

■ Stopping Method for Servomotor for Gr.2 Alarms

Parameter		Stop Mode	Mode After Stopping	When Enabled	Classification
Pn00B	Pn001				
n.□□0□ [Factory setting]	n.□□□0 [Factory setting]	Zero-speed stopping*	DB	After restart	Setup
	n.□□□1		Coast		
	n.□□□2				
n.□□1□	n.□□□0 [Factory setting]	DB	DB		
	n.□□□1		Coast		
	n.□□□2	Coast			

* Zero-speed stopping: The speed reference is set to 0 to stop quickly.

Note: The setting of Pn00B.1 is effective for position control and speed control. Pn00B.1 will be ignored for torque control and only the setting of Pn001.0 will be valid.

4.3.6 Instantaneous Power Interruption Settings

Determines whether to continue operation or turn OFF the servomotor's power when the power supply voltage to the SERVOPACK's main circuit is interrupted.

Pn509	Instantaneous Power Cut Hold Time			Speed Position Torque	Classification
	Setting Range	Setting Unit	Factory Setting	When Enabled	
	20 to 1000	1 ms	20	Immediately	Setup

If the power interruption time is shorter than the set value in Pn509, the servomotor will continue operation. If it is longer than the set value, the servomotor's power will be turned OFF during the power interruption. The servomotor is turned ON when power supply to the main circuit recovers.

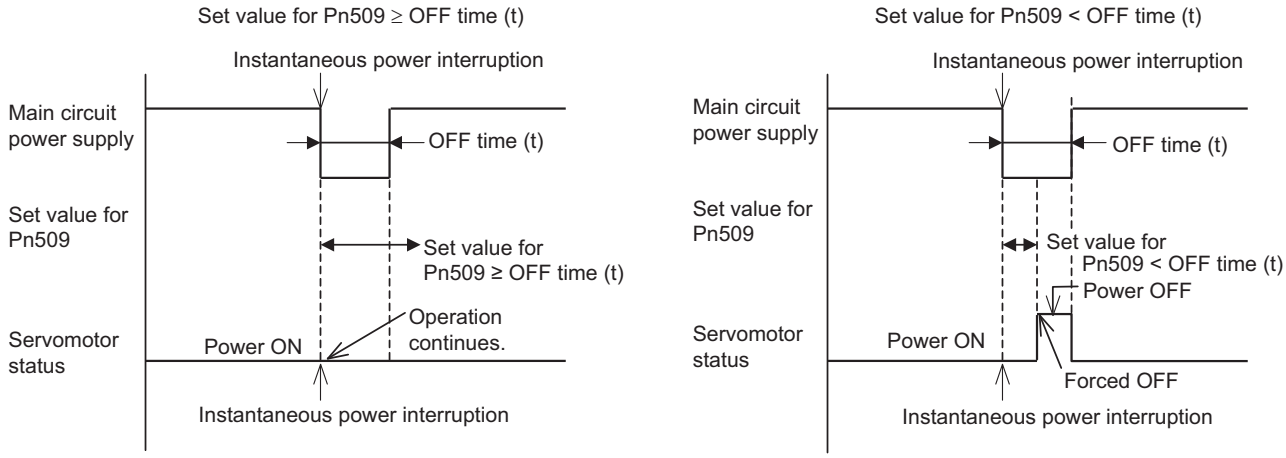

Note: If the instantaneous power interruption is longer than the set value of Pn509, the /S-RDY signal turns OFF.

IMPORTANT

- The holding time of the control power supply for the 200-V SERVOPACKs is approximately 100 ms. The holding time of the control power supply for the 100-V SERVOPACKs is approximately 65 ms. If the control power supply makes control impossible during an instantaneous power interruption, the same operation will be performed as for normally turning OFF the power supply, and the setting of Pn509 will be ignored.
- The holding time of the main circuit power supply varies with the output of the SERVOPACK. If the load on the servomotor is large and an undervoltage alarm (A.410) occurs, the setting of Pn509 will be ignored.
- The holding time of the control power supply (24 VDC) for the 400-V SERVOPACKs depends on the capability of the power supply (not included). Check the power supply before using the application.

If the uninterruptible power supplies are used for the control power supply and main circuit power supply, the SERVOPACK can withstand an instantaneous power interruption period in excess of 1000 ms.

4.3.7 SEMI F47 Function (Torque Limit Function for Low DC Power Supply Voltage for Main Circuit)

The torque limit function detects an undervoltage warning and limits the output current if the DC power supply voltage for the main circuit in the SERVOPACK drops to a specified value because the power was momentarily interrupted or the power supply voltage for the main circuit was temporality lowered.

This function complies with SEMI F47 standards for semiconductor production equipment.

Combining this function with the parameter for Instantaneous Power Cut Hold Time allows the servomotor to continue operating without stopping for an alarm or without recovery work even if the power supply voltage drops.

IMPORTANT

- This function is able to cope with instantaneous power interruptions in the voltage and time ranges stipulated in SEMI F47. An uninterruptible power supply (UPS) is required as a backup for instantaneous power interruptions that exceed these voltage and time ranges.
- This function is intended for voltage drops in the main circuit power supply. The following restrictions apply when it is used to provide an instantaneous power cut hold time in the control power supply. (There are no restrictions for the 200-VAC SERVOPACKs.)

  <Control Power Supply Restrictions>

  SERVOPACK with 400-VAC Power Input: Provide the control power supply from a 24-VDC power supply that complies with SEMI F47 standards.

  SERVOPACK with 100-VAC Power Input: Provide the control power supply from an uninterruptible power supply (UPS).

- Set the host controller and SERVOPACK torque limit so that a torque reference that exceeds the specified acceleration will not be output when the power supply for the main circuit is restored.
- Do not limit the torque to values lower than the holding torque for the vertical axis.
- This function limits torque within the range of the SERVOPACK's capability when the power is cut. It is not intended for use under all load and operating conditions. Use the actual machine to set parameters while confirming correct operation.
- Setting the Instantaneous Power Cut Hold Time lengthens the amount of time from when the power supply is turned OFF until the motor current turns OFF. Send the SV_OFF command to instantly stop the motor current.

(1) Execution Method

This function can be executed either with the host controller and the SERVOPACK or with the SERVOPACK only.

■ With the Host Controller and the SERVOPACK

The host controller limits the torque in response to an undervoltage warning.
The host controller removes the torque limit after the undervoltage warning is cleared.

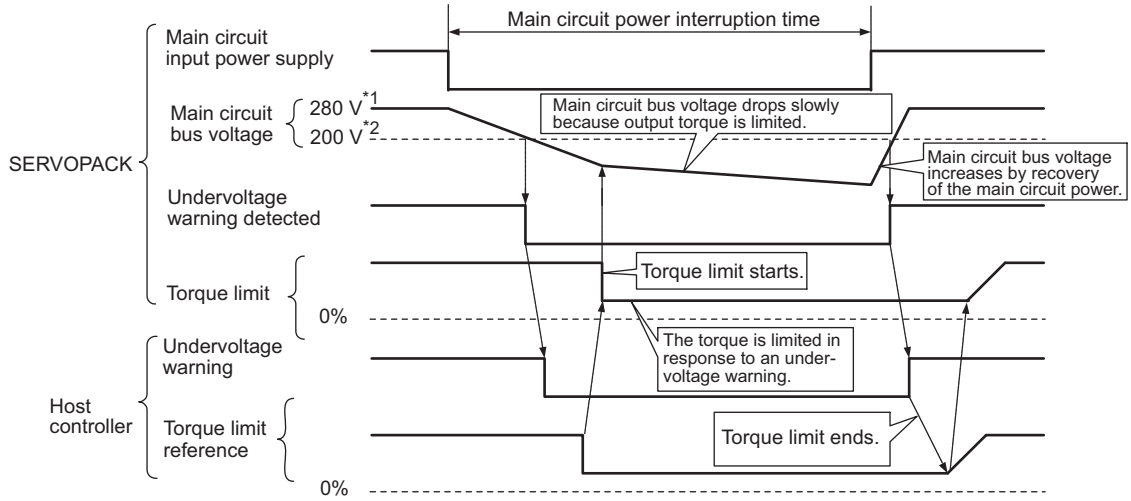

∗1. 560 V for 400-V power supply.
∗2. 400 V for 400-V power supply.

■ With the SERVOPACK only

The torque is limited in the SERVOPACK in response to an undervoltage warning.
The SERVOPACK controls the torque limit value in the set time after the undervoltage warning is cleared.
Use Pn008.1 to specify whether the function is executed by the host controller and SERVOPACK or by the SERVOPACK only.

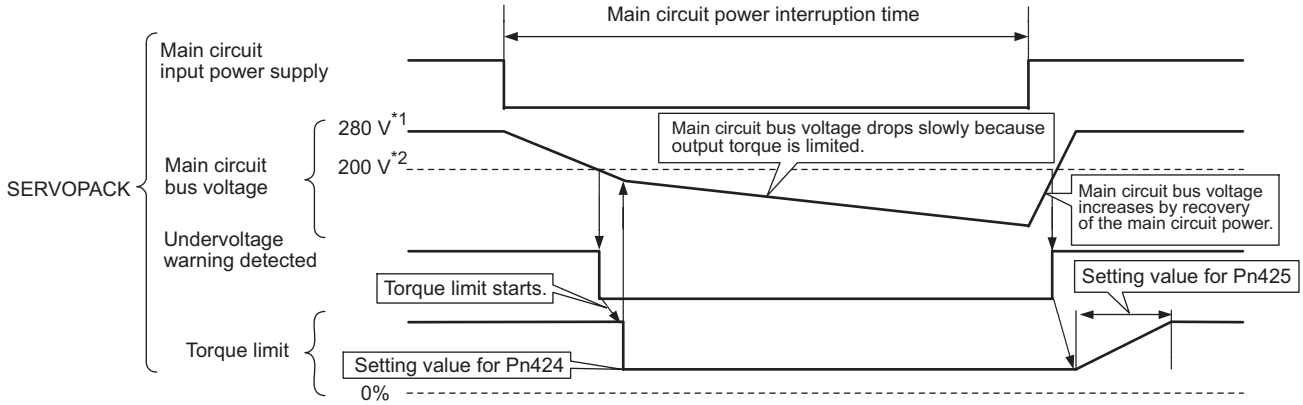

∗1. 560 V for 400-V power supply.
∗2. 400 V for 400-V power supply.

(2) Related Parameters

Parameter		Meaning	When Enabled	Classification
Pn008	n.□□0□ [Factory setting]	Does not detect undervoltage.	After restart	Setup
	n.□□1□	Detects warning and limits torque by host controller.		
	n.□□2□	Detects warning and limits torque by Pn424 and Pn425. (Only in the SERVOPACK)		

Pn424	Torque Limit at Main Circuit Voltage Drop Speed Position Torque				Classification
	Setting Range	Setting Unit	Factory Setting	When Enabled	
	0 to 100	1%*	50	Immediately	Setup
Pn425	Release Time for Torque Limit at Main Circuit Voltage Drop Speed Position Torque				Classification
	Setting Range	Setting Unit	Factory Setting	When Enabled	
	0 to 1000	1 ms	100	Immediately	Setup

* The setting unit is a percentage of the rated torque.

Pn509	Instantaneous Power Cut Hold Time Speed Position Torque				Classification
	Setting Range	Setting Unit	Factory Setting	When Enabled	
	20 to 1000	1 ms	20	Immediately	Setup

Note: When using SEMI F47 function, set 1000 ms.

4.3.8 Setting Motor Overload Detection Level

In this SERVOPACK, the detection timing of the warnings and alarms can be changed by changing how to detect an overload warning (A.910) and overload (low load) alarm (A.720).
The overload characteristics and the detection level of the overload (high load) alarm (A.710) cannot be changed.

(1) Changing Detection Timing of Overload Warning (A.910)

The overload warning level is set by default to 20% so that an overload warning is detected in 20% of the time required to detect an overload alarm. The time required to detect an overload warning can be changed by changing the setting of the overload warning level (Pn52B). This protective function enables the warning output signal (/WARN) to serve as a protective function and to be output at the best timing for your system.
The following graph shows an example of the detection of an overload warning when the overload warning level (Pn52B) is changed from 20% to 50%. An overload warning is detected in half of the time required to detect an overload alarm.

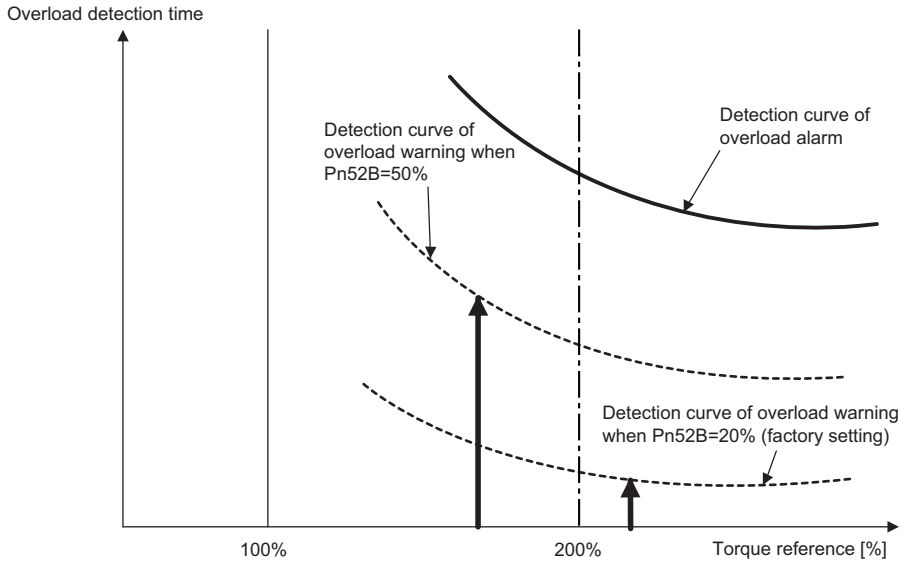

Note: For details, refer to *Overload Characteristics* listed in the section for the relevant servomotor in the *Σ-V Series Product Catalog* (No.: KAEP S800000 42).

Pn52B	Overload Warning Level			Speed Position Torque	Classification
	Setting Range	Setting Unit	Factory Setting	When Enabled	
	1 to 100	1%	20	Immediately	Setup

(2) Changing Detection Timing of Overload (Low Load) Alarm (A.720)

An overload (low load) alarm (A.720) can be detected earlier to protect the servomotor from overloading. The time required to detect an overload alarm can be shortened by using the derated motor base current obtained with the following equation.

Note: The detection level of the overload (high load) alarm (A.710) cannot be changed.

Motor base current × Derating of base current at detecting overload of motor (Pn52C)
= Derated motor base current

Motor base current: Threshold value of motor current to start calculation for overload alarm
Derating of base current at detecting overload of motor (Pn52C): Derating of motor base current

The following graph shows an example of the detection of an overload alarm when Pn52C is set to 50%. The calculation for the overload of motors starts at 50% of the motor base current and then an overload alarm will be detected earlier.
Changing the setting of Pn52C will change the detection timing of the overload alarm, so the time required to detect the overload warning will also be changed.

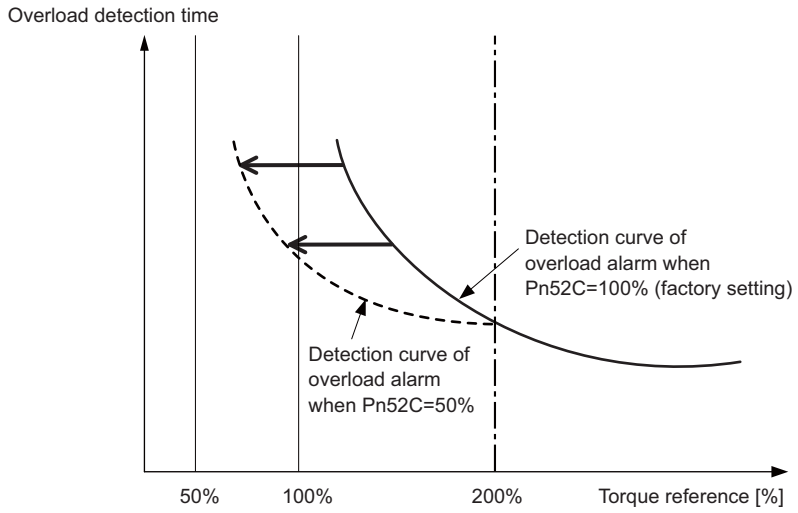

As a guideline of motor heating conditions, the relationship between the heat sink sizes and deratings of base current is shown in a graph in:
Servomotor Heating Conditions in *Rotary Servomotors General Instruction* in *Σ-V Series Product Catalog* (No.: KAEP S800000 42).
Set Pn52C to a value in accordance with the heat sink size and derating shown in the graph, so that an overload alarm can be detected at the best timing to protect the servomotor from overloading.

Note: For details, refer to *Overload Characteristics* listed in the section for the relevant servomotor in the *Σ-V Series Product Catalog* (No.: KAEP S800000 42).

Pn52C	Derating of Base Current at Detecting Overload of Motor			Speed Position Torque	Classification
	Setting Range	Setting Unit	Factory Setting	When Enabled	
	10 to 100	1%	100	After restart	Setup

4.4 Trial Operation

This section describes a trial operation using MECHATROLINK-III communications.

4.4.1 Inspection and Checking before Trial Operation

To ensure safe and correct trial operation, inspect and check the following items before starting trial operation.

(1) Servomotors

Inspect and check the following items, and take appropriate measures before performing trial operation if any problem exists.

- Are all wiring and connections correct?
- Are all nuts and bolts securely tightened?
- If the servomotor has an oil seal, is the seal undamaged and is the servomotor oiled?

Note: When performing trial operation on a servomotor that has been stored for a long period of time, perform the inspection according to the procedures described in *1.7 Inspection and Maintenance*.

(2) SERVOPACKs

Inspect and check the following items, and take appropriate measures before performing trial operation if any problem exists.

- Are all wiring and connections correct?
- Is the correct power supply voltage being supplied to the SERVOPACK?

4.4.2 Trial Operation via MECHATROLINK-III

The following table provides the procedures for trial operation via MECHATROLINK-III.

Step	Description	Reference
1	Confirm that the wiring is correct, and then connect the I/O signal connector (CN1 connector).	*3 Wiring and Connection*
2	Turn ON the power to the SERVOPACK. And then, turn ON the power of the host controller. If the power is supplied to the SERVOPACK's control circuit, the seven-segment LED indicator will light up as shown here. If the power is supplied to the SERVOPACK's main circuit, the CHARGE indicator on the SERVOPACK will light up. If communications are established, the L1 and L2, LED indicators corresponding to the connector CN6A and CN6B connected to the MECHATROLINK-III cable will light up. If the L1 and L2, LED indicators do not light up, recheck the settings of MECHATROLINK-III setting switches S1, S2, and S3, and then turn the power OFF and ON again.	–
3	Send the CONNECT command from the host controller. If the SERVOPACK correctly receives the CONNECT command, the CN, LED indicator will light up. If the CN does not light up, the set value of the CONNECT command is incorrect. Reset the CONNECT command, and then resend it from the host controller.	*Σ-V Series User's Manual MECHATROLINK-III Standard Servo Profile Commands* (No: SIEP S800000 63)
4	Check the product type using an ID_RD command. A reply showing the product type, such as SGDV-R90A21A, is received from the SERVOPACK.	
5	Set the following items to the necessary settings for a trial operation. • Electronic gear settings • Rotational direction of servomotor • Overtravel	*4.4.3 Electronic Gear* *4.3.1 Servomotor Rotation Direction* *4.3.2 Overtravel*
6	Save these settings (step 5). • If saving the settings in the host controller, use the SVPRM_WR command (set the mode to RAM area). • If saving settings in the SERVOPACK, use the SVPRM_WR command (set the mode to the non-volatile memory area).	*Σ-V Series User's Manual MECHATROLINK-III Standard Servo Profile Commands* (No: SIEP S800000 63)
7	Send the CONFIG command to enable the settings.	
8	Send the SENS_ON command to obtain the position data (encoder ready response).	
9	Send the SV_ON command. A response showing that the servomotor has switched to Drive status and that SVON=1 (Conductivity to motor being made) is received.	
10	Run the servomotor at low speed. <Example using a positioning command> Command used: POSING Command setting: Positioning position =10000 (If using the absolute encoder, add 10000 to the present position), rapid traverse speed= 400	–
11	Check the following points while running the servomotor at low speed (step 10). • Confirm that the rotational direction of the servomotor correctly coincides with the forward rotation or reverse rotation reference. If they do not coincide, reset the direction. • Confirm that no unusual vibrations, noises, or temperature rises occur. If any abnormalities are seen, correct the conditions. Note: Because the running-in of the load machine is not sufficient at the time of the trial operation, the servomotor may become overloaded.	*4.3.1 Servomotor Rotation Direction* *9.4 Troubleshooting Malfunction Based on Operation and Conditions of the Servomotor*

4.4.3 Electronic Gear

The electronic gear enables the workpiece travel distance per reference unit input from the host controller. The minimum unit of the position data moving a load is called a reference unit.

The section indicates the difference between using and not using an electronic gear when a workpiece is moved 10 mm in the following configuration.

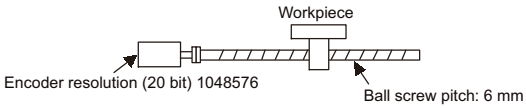

When the Electronic Gear is Not Used:

① Calculate the revolutions.
1 revolution is 6 mm. Therefore, 10 ÷ 6 = 10/6 revolutions.

② Calculate the required reference units.
1048576 reference units is 1 revolution. Therefore, 10/6 × 1048576 = 1747626.66 reference units.

③ Input 1747627 references as reference units.

Reference units must be calculated per reference. → complicated

When the Electronic Gear is Used:

The reference unit is 1 μm. Therefore, to move the workpiece 10 mm (10000 μm),
1 reference unit = 1 μm, so 10000 ÷ 1 = 10000 reference units.
Input 10000 reference units.

Calculation of reference units per reference is not required. → simplified

(1) Electronic Gear Ratio

Set the electronic gear ratio using Pn20E and Pn210.

Pn20E	Electronic Gear Ratio (Numerator)			Position	Classification
	Setting Range	Setting Unit	Factory Setting	When Enabled	
	1 to 1073741824	1	1	After restart	Setup
Pn210	Electronic Gear Ratio (Denominator)			Position	Classification
	Setting Range	Setting Unit	Factory Setting	When Enabled	
	1 to 1073741824	1	1	After restart	Setup

If the gear ratio of the servomotor and the load shaft is given as n/m where m is the rotation of the servomotor and n is the rotation of the load shaft,

$$\text{Electronic gear ratio: } \frac{B}{A} = \frac{Pn20E}{Pn210} = \frac{\text{Encoder resolution}}{\text{Travel distance per load shaft revolution (reference units)}} \times \frac{m}{n}$$

■ Encoder Resolution

Encoder resolution can be checked with servomotor model designation.

SGM□V-□□□□□□□

Symbol	Specification	Encoder Resolutions
3	20-bit absolute	1048576
D	20-bit incremental	1048576
A	13-bit incremental	8192

SGMPS -□□□□□□□

Symbol	Specification	Encoder Resolutions
2	17-bit absolute	131072
C	17-bit incremental	131072

SGMCS -□□□□□□□

Symbol	Specification	Encoder Resolutions
3	20-bit absolute	1048576
D	20-bit incremental	1048576

IMPORTANT

Electronic gear ratio setting range: 0.001 ≤ Electronic gear ratio (B/A) ≤ 4000

If the electronic gear ratio is outside this range, a parameter setting error 1 (A.040) will be output.

(2) Electronic Gear Ratio Setting Examples

The following examples show electronic gear ratio settings for different load configurations.

Step	Operation	Load Configuration		
		Ball Screw	Disc Table	Belt and Pulley
		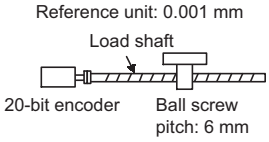	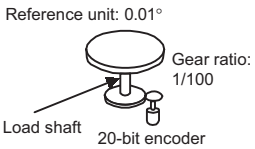	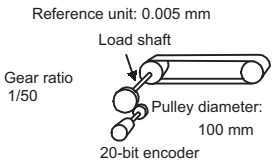
1	Check machine specifications.	· Ball screw pitch: 6 mm · Gear ratio: 1/1	Rotation angle per revolution: 360° Gear ratio: 1/100	Pulley diameter: 100 mm (pulley circumference: 314 mm) • Gear ratio: 1/50
2	Check the encoder resolution.	1048576 (20-bit)	1048576 (20-bit)	1048576 (20-bit)
3	Determine the reference unit used.	Reference unit: 0.001 mm (1 μm)	Reference unit: 0.01°	Reference unit: 0.005 mm (5 μm)
4	Calculate the travel distance per load shaft revolution. (Reference unit)	6 mm/0.001 mm=6000	360°/0.01°=36000	314 mm/0.005 mm=62800
5	Calculate the electronic gear ratio.	$\frac{B}{A} = \frac{1048576}{6000} \times \frac{1}{1}$	$\frac{B}{A} = \frac{1048576}{36000} \times \frac{100}{1}$	$\frac{B}{A} = \frac{1048576}{62800} \times \frac{50}{1}$
6	Set parameters.	Pn20E: 1048576	Pn20E: 104857600	Pn20E: 52428800
		Pn210: 6000	Pn210: 36000	Pn210: 62800

4.4.4 Encoder Output Pulses

The encoder pulse output is a signal that is output from the encoder and processed inside the SERVOPACK. It is then output externally in the form of two phase pulse signal (phases A and B) with a 90° phase differential. It is used as the position feedback to the host controller.

Signals and output phase form are as shown below.

(1) Signals

Type	Signal Name	Connector Pin Number	Name	Remarks
Output	PAO	CN1-17	Encoder output pulse: phase A	These encoder pulse output pins output the number of pulses per motor revolution that is set in Pn212. Phase A and phase B are different from each other in phase by an electric angle of 90°.
	/PAO	CN1-18		
	PBO	CN1-19	Encoder output pulse: phase B	
	/PBO	CN1-20		
	PCO	CN1-21	Encoder output pulse: phase C	One pulse is output per motor rotation.
	/PCO	CN1-22		

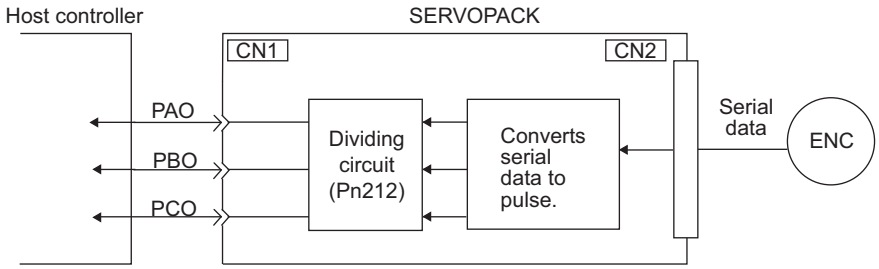

(2) Output Phase Form

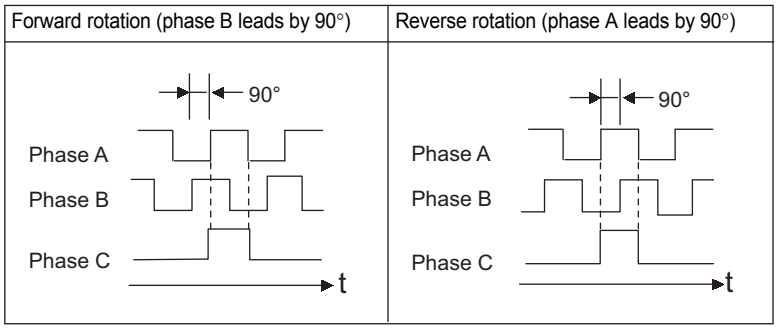

Note: The pulse width for phase C (origin pulse) changes according to the setting of the encoder output pulses (Pn212) and becomes the same as that for phase A.
Even in reverse rotation mode (Pn000.0 = 1), the output phase form is the same as that for the standard setting (Pn000.0 = 0) above.

IMPORTANT

If using the SERVOPACK's phase-C pulse output for a zero point return, rotate the servomotor two or more times before starting a zero point return. If the servomotor cannot be rotated two or more times, perform a zero point return at a motor speed of 600 min^{-1} or below. If the motor speed is faster than 600 min^{-1}, the phase-C pulse may not be output correctly.

4.4.5 Setting Encoder Output Pulse

Set the encoder output pulse using the following parameter.

Pn212	Encoder Output Pulses			Speed Position Torque	Classification
	Setting Range	Setting Unit	Factory Setting	When Enabled	
	16 to 1073741824	1 P/rev	2048	After restart	Setup

Pulses from the encoder per revolution are divided inside the SERVOPACK by the number set in this parameter before being output. Set the number of encoder output pulses according to the system specifications of the machine or host controller.

According to the encoder resolution, the number of encoder output pulses are limited.

Setting Range of Encoder Output Pulses (P/Rev)	Setting Unit	Encoder Resolution			Upper Limit of Servomotor Speed for Set Encoder Output Pulses (min^{-1})
		13 bits (8,192 pulses)	17 bits (131,072 pulses)	20 bits (1,048,576 pulses)	
16 to 2048	1	✓	–	–	6000
16 to 16384	1	–	✓	✓	6000
16386 to 32768	2	–	✓	✓	3000
32772 to 65536	4	–	–	✓	1500
65544 to 131072	8	–	–	✓	750
131088 to 262144	16	–	–	✓	375

Note 1. The setting range varies with the encoder resolution for the servomotor used.
An encoder output pulse setting error (A.041) will occur if the setting is outside the allowable range or does not satisfy the setting conditions.
Pn212 = 25000 (P/Rev) is accepted, but
Pn212 = 25001 (P/Rev) is not accepted. The alarm A.041 is output because the setting unit differs from that in the above table.

2. The upper limit of the pulse frequency is approx. 1.6 Mpps.
The servomotor speed is limited if the setting value of the encoder output pulses (Pn212) is large.
An overspeed of encoder output pulse rate alarm (A.511) will occur if the motor speed exceeds the upper limit specified in the above table.

Output Example: When Pn212 = 16 (16-pulse output per one revolution), PAO and PBO are output as shown below.

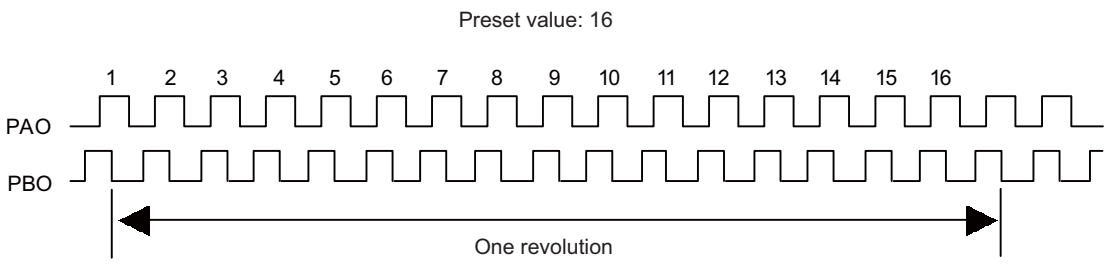

4.5 Test Without Motor Function

The test without a motor is used to check the operation of the host controller and peripheral devices by simulating the operation of the servomotor in the SERVOPACK, i.e., without actually operating a servomotor. This function enables you to check wiring, verify the system while debugging, and verify parameters, thus shortening the time required for setup work and preventing damage to the machine that may result from possible malfunctions. The operation of the motor can be checked during performing this function regardless of whether the motor is actually connected or not.

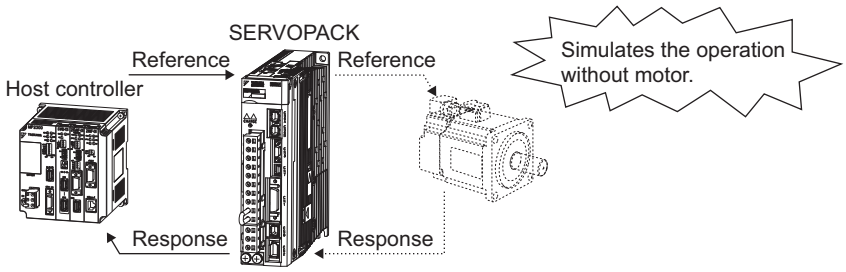

Use Pn00C.0 to enable or disable the test without a motor.

Parameter		Meaning	When Enabled	Classification
Pn00C	n.□□□0 [Factory setting]	Disables the test without a motor.	After restart	Setup
	n.□□□1	Enables the test without a motor.		

4.5.1 Motor Information

The motor information that is used for a test without a motor is given below.

(1) When Motor is Connected

If a motor is connected, the information from the connected motor is used for the motor and encoder scale information. The set values of Pn00C.1 and Pn00C.2 are not used.

(2) When Motor is Not Connected

The information for the virtual motor that is stored in the SERVOPACK is used. The set values of Pn00C.1 and Pn00C.2 are used for the encoder information.

■ Encoder Resolution

The encoder information for the motor is set in Pn00C.1. The setting of Pn00C.1 is not used for an external encoder with fully-closed loop control.

Parameter		Meaning	When Enabled	Classification
Pn00C	n.□□0□ [Factory setting]	Sets the encoder resolution for the test without a motor to 13 bits.	After restart	Setup
	n.□□1□	Sets the encoder resolution for the test without a motor to 20 bits.		

■ Encoder Type

The encoder information for the motor is set in Pn00C.2. An external encoder with fully-closed loop control is always regarded as an incremental encoder.

Parameter		Meaning	When Enabled	Classification
Pn00C	n.□0□□ [Factory setting]	Sets an incremental encoder as an encoder type for the test without a motor.	After restart	Setup
	n.□1□□	Sets an absolute encoder as an encoder type for the test without a motor.		

(3) When External Encoder for Fully-closed Loop Control is Connected

The information from an external encoder is used as the encoder information.

(4) When External Encoder for Fully-closed Loop Control is Not Connected

The encoder information stored in the SERVOPACK is used for the encoder information.

- Resolution: 256
- Incremental encoder

4.5.2 Motor Position and Speed Responses

For the test without a motor, the following responses are simulated for references from the host controller according to the gain settings for position or speed control.

- Servomotor position
- Servomotor speed
- Encoder position

The load model, however, will be a rigid system with the moment of inertia ratio that is set in Pn103.

4.5.3 Limitations

The following functions cannot be used during the test without a motor.

- Regeneration and dynamic brake operation
- Brake output signal (The brake output signal can be checked with the I/O signal monitor function of the SigmaWin+.)
- Items marked with "×" in the following utility function table.

Fn No.	Contents	Can be used or not	
		Motor not connected	Motor connected
Fn000	Alarm history display	○	○
Fn002	JOG operation	○	○
Fn003	Origin search	○	○
Fn004	Program JOG operation	○	○
Fn005	Initializing parameter settings	○	○
Fn006	Clearing alarm history	○	○
Fn008	Absolute encoder multiturn reset and encoder alarm reset	×	○
Fn00C	Offset adjustment of analog monitor output	○	○
Fn00D	Gain adjustment of analog monitor output	○	○
Fn00E	Automatic offset-signal adjustment of the motor current detection signal	×	○
Fn00F	Manual offset-signal adjustment of the motor current detection signal	×	○
Fn010	Write prohibited setting	○	○
Fn011	Servomotor model display	○	○
Fn012	Software version display	○	○
Fn013	Multiturn limit value setting change when a multiturn limit disagreement alarm occurs	×	○
Fn014	Resetting configuration error in option modules	○	○
Fn01B	Vibration detection level initialization	×	×
Fn01E	Display of SERVOPACK and servomotor ID	○	○
Fn01F	Display of servomotor ID in feedback option module	○	○
Fn020	Origin setting	×	○
Fn030	Software reset	○	○
Fn200	Tuning-less levels setting	×	×
Fn201	Advanced autotuning	×	×
Fn202	Advanced autotuning by reference	×	×
Fn203	One-parameter tuning	×	×
Fn204	Anti-resonance control adjustment function	×	×
Fn205	Vibration suppression function	×	×
Fn206	EasyFFT	×	×
Fn207	Online vibration monitor	×	×

Note: ○: Can be used
× : Cannot be used

4.5.4 Digital Operator Displays during Testing without Motor

An asterisk (∗) is displayed before status display to indicate the test without a motor operation is in progress.

```
∗BB          -PRM/MON-
Un000=  00000
Un002=  00000
Un008=  0000000000
Un00D=  0000000000
```

(Example: Status of power to the servomotor is OFF)

Display	Status
*RUN	Power is supplied to the servomotor.
*BB	Power to the servomotor is OFF.
*PT NT	Forward or reverse run is prohibited.
*P-OT	Forward run is prohibited.
*N-OT	Reverse run is prohibited.
*HBB	In hard-wire base block (safety) state.

Note: The test without a motor status is not displayed during alarm occurs (A.□□□).

4.6 Limiting Torque

The SERVOPACK provides the following four methods for limiting output torque to protect the machine.

Limiting Method	Description	Reference Section
Internal torque limit	Always limits torque by setting the parameter.	4.6.1
External torque limit	Limits torque by input signal from the host controller.	4.6.2
Torque limit with the command data (TLIM)*	Limits torque by using the command data (TLIM) for torque limiting function settable commands.	–
Torque limit with P_CL and N_CL signals of the servo command output signals (SVCMD_IO)*	Limits torque by using P_CL and N_CL signals of the servo command output signals (SVCMD_IO).	–

* For details, refer to *Σ-V Series User's Manual MECHATROLINK-III Standard Servo Profile Commands* (No.: SIEP S800000 63).

Note: The maximum torque of the servomotor is used when the set value exceeds the maximum torque.

4.6.1 Internal Torque Limit

This function always limits maximum output torque by setting values of following parameters.

Pn402	Forward Torque Limit			Speed Position Torque	Classification
	Setting Range	Setting Unit	Factory Setting	When Enabled	
	0 to 800	1%	800	Immediately	Setup
Pn403	Reverse Torque Limit			Speed Position Torque	Classification
	Setting Range	Setting Unit	Factory Setting	When Enabled	
	0 to 800	1%	800	Immediately	Setup

The setting unit is a percentage of the rated torque.

Note: If the settings of Pn402 and Pn403 are too low, the torque may be insufficient for acceleration or deceleration of the servomotor.

Torque waveform

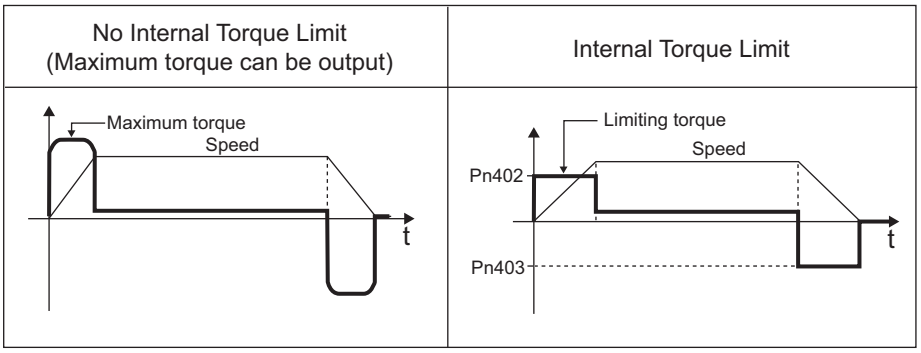

4.6.2 External Torque Limit

Use this function to limit torque by inputting a signal from the host controller at specific times during machine operation. For example, some pressure must continually be applied (but not enough to damage the workpiece) when the robot is holding a workpiece or when a device is stopping on contact.

(1) Input Signals

Use the following input signals to limit a torque by external torque limit.

Type	Signal Name	Connector Pin Number	Setting	Meaning	Limit value
Input	/P-CL	Must be allocated	ON (closed)	Forward external torque limit ON	The smaller value of these settings: Pn402 or Pn404
			OFF (open)	Forward external torque limit OFF	Pn402
Input	/N-CL	Must be allocated	ON (closed)	Reverse external torque limit ON	The smaller value of these settings: Pn403 or Pn405
			OFF (open)	Reverse external torque limit OFF	Pn403

Note: Use parameter Pn50B.2 and Pn50B.3 to allocate the /P-CL signal and the /N-CL signal for use. For details, refer to *3.3.1 Input Signal Allocations*.

(2) Related Parameters

Set the following parameters for external torque limit.

Pn402	Forward Torque Limit			Speed Position Torque	Classification
	Setting Range	Setting Unit	Factory Setting	When Enabled	
	0 to 800	1%	800	Immediately	Setup
Pn403	Reverse Torque Limit			Speed Position Torque	Classification
	Setting Range	Setting Unit	Factory Setting	When Enabled	
	0 to 800	1%	800	Immediately	Setup
Pn404	Forward External Torque Limit			Speed Position Torque	Classification
	Setting Range	Setting Unit	Factory Setting	When Enabled	
	0 to 800	1%	100	Immediately	Setup
Pn405	Reverse External Torque Limit			Speed Position Torque	Classification
	Setting Range	Setting Unit	Factory Setting	When Enabled	
	0 to 800	1%	100	Immediately	Setup

The setting unit is a percentage of the rated torque.

Note: If the settings of Pn402, Pn403, Pn404, and Pn405 are too low, the torque may be insufficient for acceleration or deceleration of the servomotor.

(3) Changes in Output Torque during External Torque Limiting

The following diagrams show the change in output torque when the internal torque limit is set to 800%.

In this example, the servomotor rotation direction is Pn000.0 = 0 (Sets CCW as forward direction).

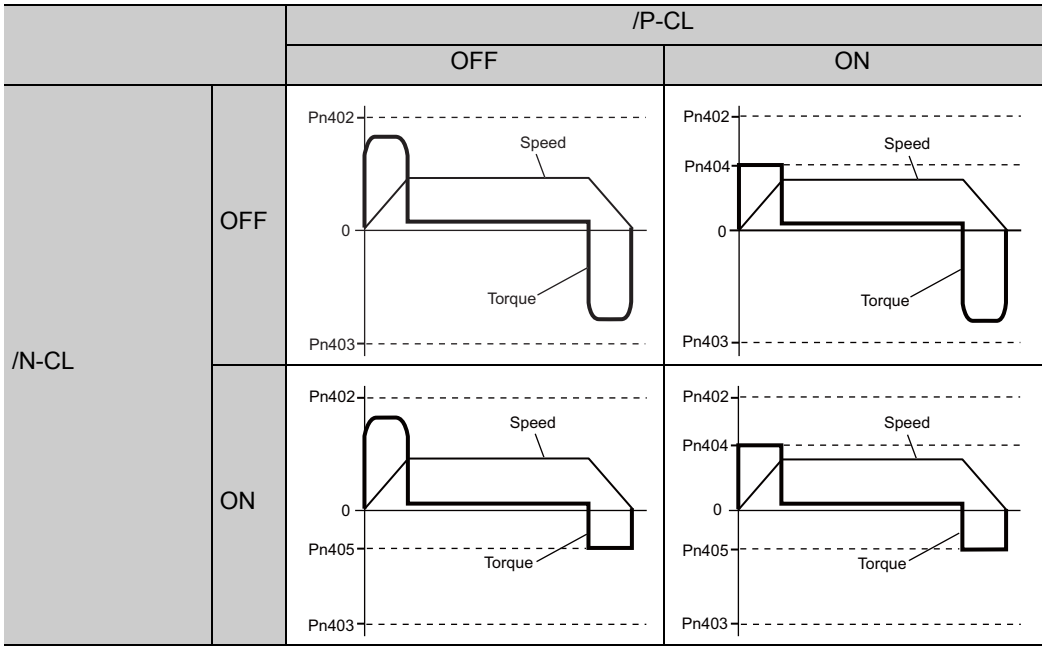

4.6.3 Checking Output Torque Limiting during Operation

The following signal can be output to indicate that the servomotor output torque is being limited.

Type	Signal Name	Connector Pin Number	Setting	Meaning
Output	/CLT	Must be allocated	ON (closed)	Servomotor output torque is being limited.
			OFF (open)	Servomotor output torque is not being limited.

Note: Use parameter Pn50F.0 to allocate the /CLT signal for use. For details, refer to *3.3.2 Output Signal Allocations*.

4.7 Absolute Encoders

If using an absolute encoder, a system to detect the absolute position can be designed for use with the host controller. As a result, an operation can be performed without a zero point return operation immediately after the power is turned ON.

A battery case is required to save position data in the absolute encoder.
The battery is attached to the battery case of the encoder cable.
If an encoder cable with a battery case is not used, install a battery to the host controller.

PROHIBITED

- Do not install batteries in both the host controller and battery case. It is dangerous because that sets up a loop circuit between the batteries.

Note: The standard specification of the direct drive motor include an absolute encoder that shows values for a single rotation, so a battery case is not required for direct drive motors.
Also the following features are not required;
- Absolute encoder setup
- Multiturn limit setting

Set Pn002.2 to 0 (factory setting) to use the absolute encoder.

Parameter		Meaning	When Enabled	Classification
Pn002	n.□0□□ [Factory setting]	Uses the absolute encoder as an absolute encoder.	After restart	Setup
	n.□1□□	Uses the absolute encoder as an incremental encoder.		

A battery is not required when using the absolute encoder as an incremental encoder.

IMPORTANT

The output range of the rotational serial data for the Σ-V absolute position detecting system is different from that of earlier systems for 12-bit and 15-bit encoders. As a result, the infinite-length positioning system of the Σ Series must be changed for use with products in the Σ-V Series. Be sure to make the following system modification.

Servomotor Series	Resolution	Output Range of Rotational Serial Data	Action when Limit Is Exceeded
Σ Series SGD SGDA SGDB	12-bit 15-bit	-99999 to + 99999	• When the upper limit (+99999) is exceeded in the forward direction, the rotational serial data will be 0. • When the lower limit (-99999) is exceeded in the reverse direction, the rotational serial data will be 0.
Σ-II, Σ-III, Σ-V Series SGDM SGDH SGDS SGDV	17-bit 20-bit	-32768 to + 32767	• When the upper limit (+32767) is exceeded in the forward direction, the rotational serial data will be -32768.* • When the lower limit (-32768) is exceeded in the reverse direction, the rotational serial data will be +32767.*

* The action differs when the multiturn limit setting (Pn205) is changed. Refer to *4.7.6 Multiturn Limit Setting*.

4.7.1 Connecting the Absolute Encoder

The following diagram shows the connection between a servomotor with an absolute encoder, the SERVO-PACK, and the host controller.

(1) Using an Encoder Cable with a Battery Case

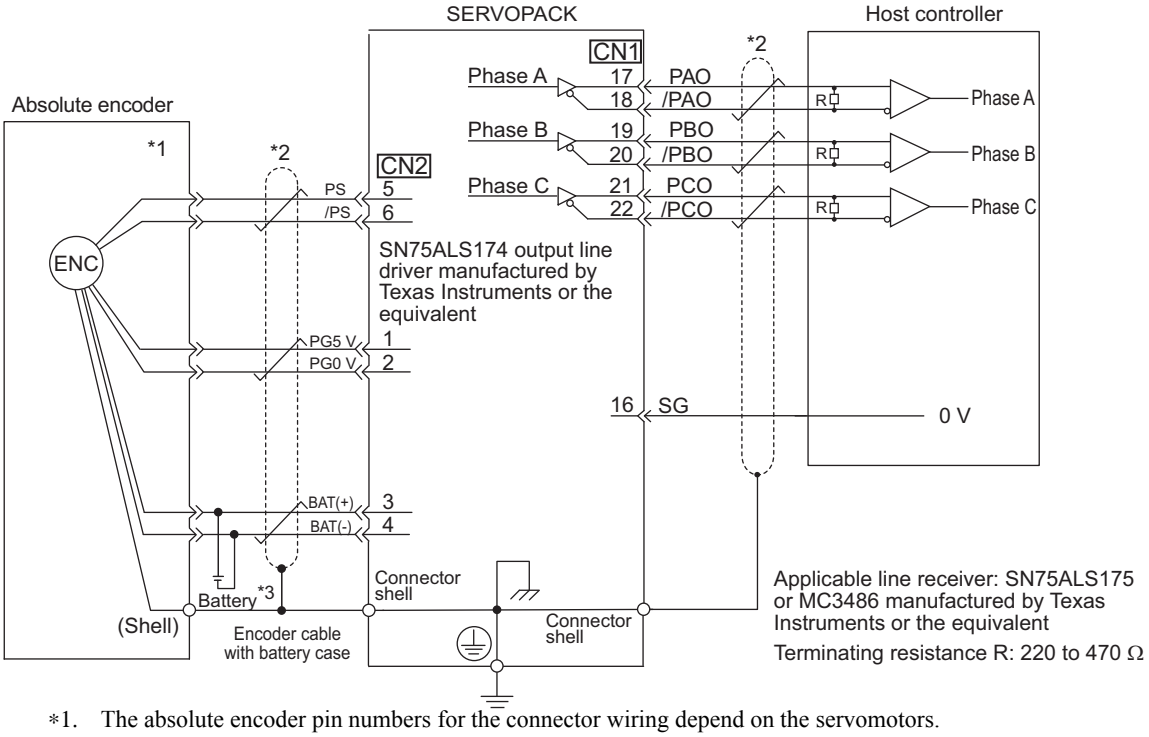

∗1. The absolute encoder pin numbers for the connector wiring depend on the servomotors.

∗2. : represents shielded twisted-pair wires.

∗3. When using an absolute encoder, provide power by installing an encoder cable with a JUSP-BA01-E Battery Case or install a battery on the host controller.

(2) Installing the Battery in the Host Controller

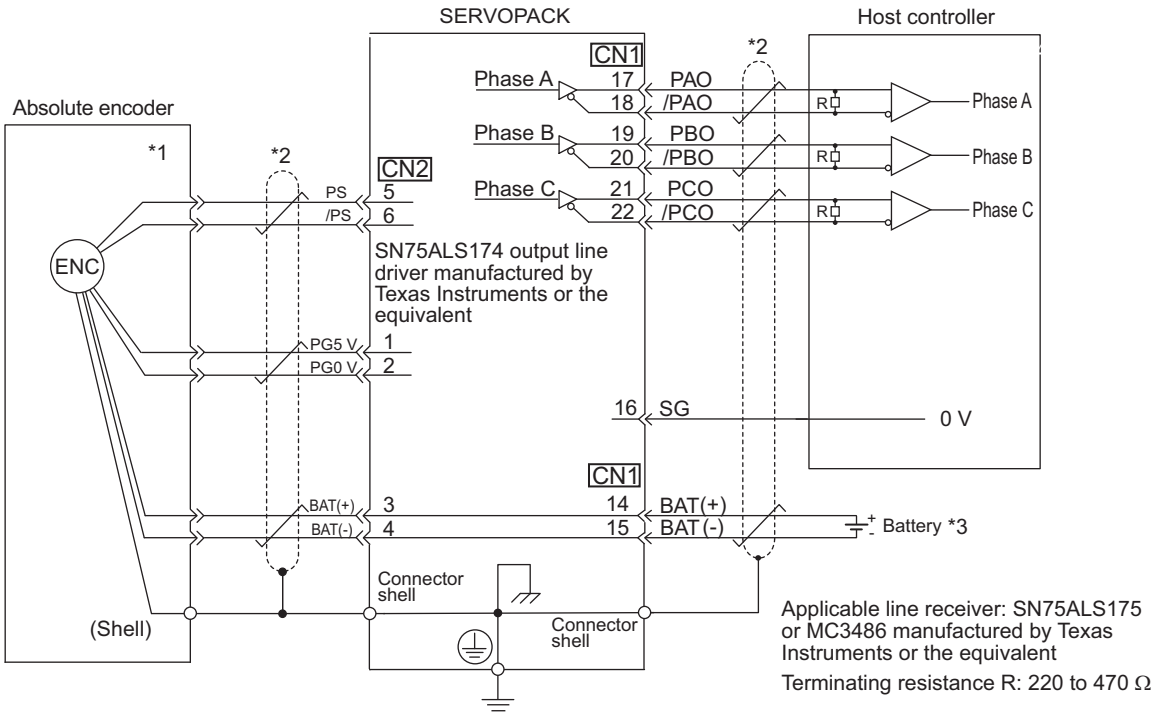

∗1. The absolute encoder pin numbers for the connector wiring depend on the servomotors.

∗2. : represents shielded twisted-pair wires.

∗3. When using an absolute encoder, provide power by installing an encoder cable with a JUSP-BA01-E Battery Case or install a battery on the host controller.

4.7.2 Absolute Data Request (SENS ON Command)

The Turn Sensor ON command (SENS_ON) must be sent to obtain absolute data as an output from the SERVOPACK.

The SENS_ON command is sent at the following timing.

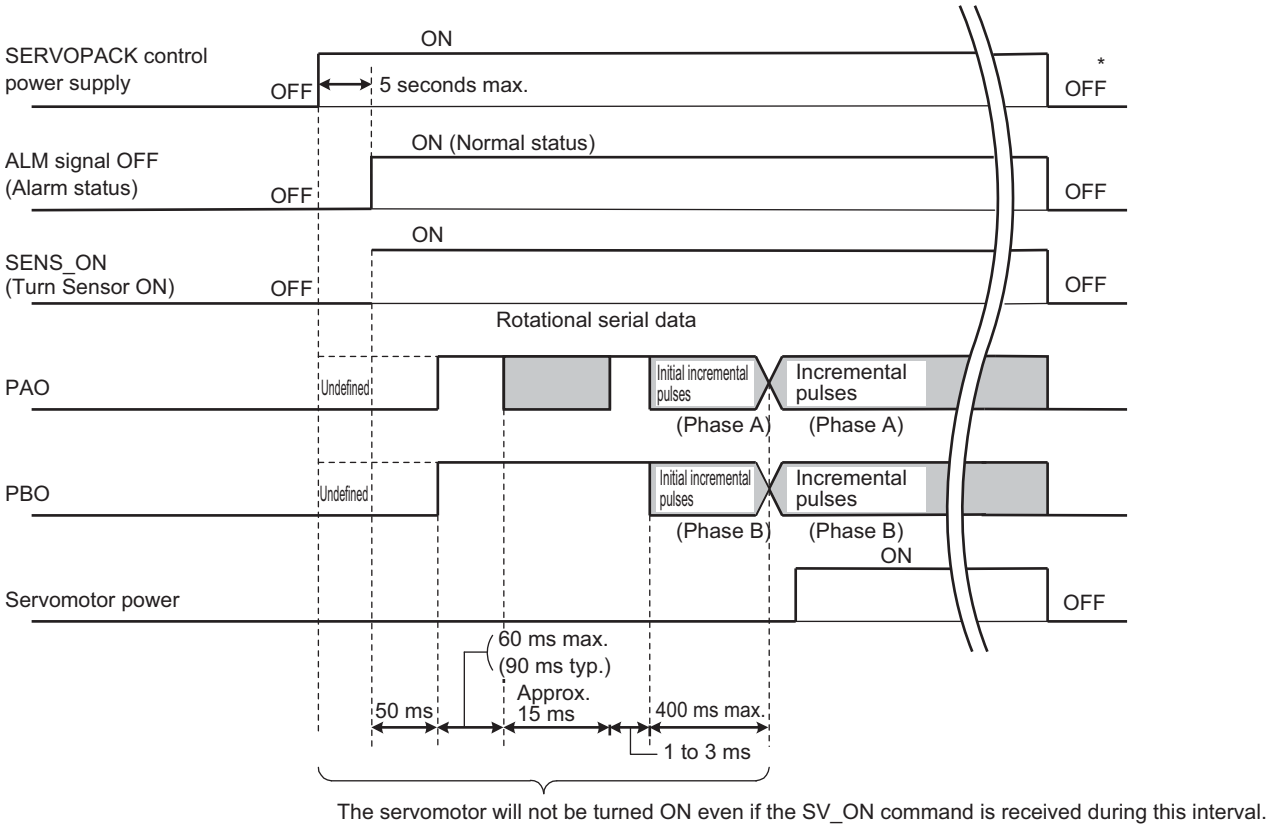

* Send the SENS_OFF command to turn OFF the control power supply.

4.7.3 Battery Replacement

If the battery voltage drops to approximately 2.7 V or less, an absolute encoder battery error alarm (A.830) or an absolute encoder battery error warning (A.930) will be displayed.

If this alarm or warning is displayed, replace the batteries using the following procedure.

Use Pn008.0 to set either an alarm (A.830) or a warning (A.930).

Parameter		Meaning	When Enabled	Classification
Pn008	n.□□□0 [Factory setting]	Outputs the alarm A.830 when the battery voltage drops.	After restart	Setup
	n.□□□1	Outputs the warning A.930 when the battery voltage drops.		

- If Pn008.0 is set to 0, alarm detection will be enabled for 4 seconds after the ALM signal outputs max. 5 seconds when the control power is turned ON.
  No battery-related alarm will be displayed even if the battery voltage drops below the specified value after these 4 seconds.
- If Pn008.0 is set to 1, alarm detection will be always enabled after the ALM signal outputs max. 5 seconds when the control power supply is turned ON.

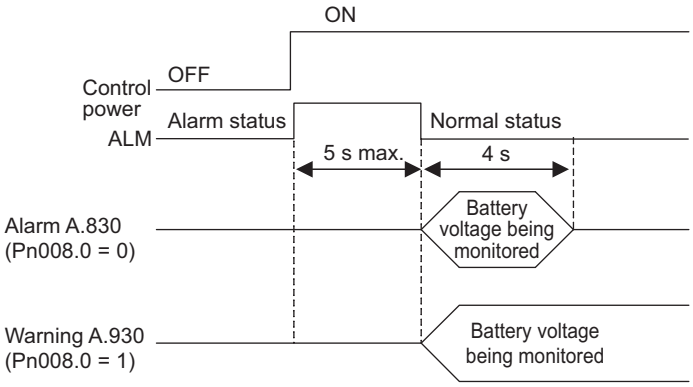

(1) Battery Replacement Procedure

■ Using an Encoder Cable with a Battery Case

1. Turn ON the control power supply of the SERVOPACK only.
2. Open the battery case cover.

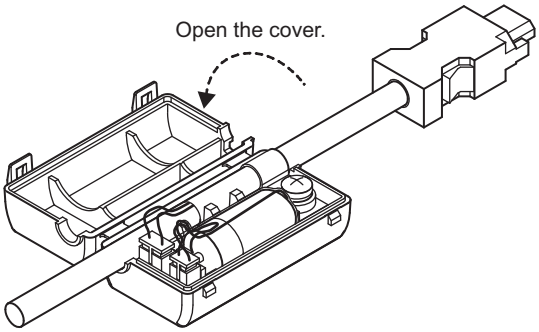

3. Remove the old battery and mount the new JZSP-BA01 battery as shown below.

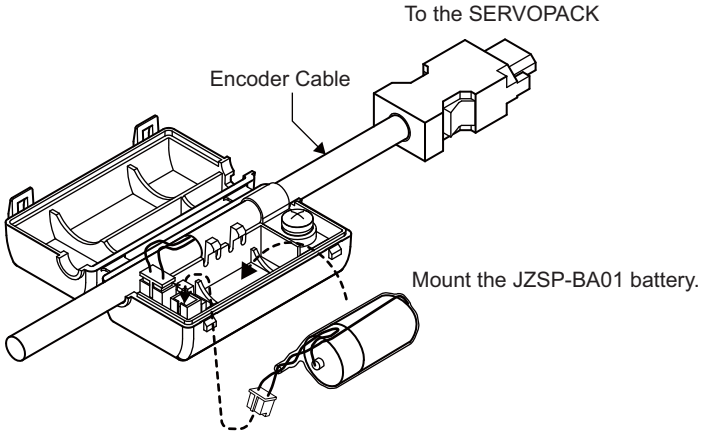

4. Close the battery case cover.

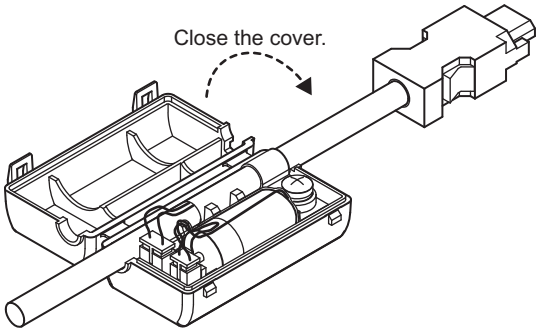

5. After replacing the battery, turn OFF the control power supply to clear the absolute encoder battery error alarm (A.830).
6. Turn ON the control power supply again.
7. Check that the alarm display has been cleared and that the SERVOPACK operates normally.

IMPORTANT	If the SERVOPACK control power supply is turned OFF and the battery is disconnected (which includes disconnecting the encoder cable), the absolute encoder data will be deleted.

■ Installing a Battery in the Host Controller

1. Turn ON the control power supply of the SERVOPACK only.
2. Remove the old battery and mount the new battery.
3. After replacing the battery, turn OFF the control power supply to clear the absolute encoder battery error alarm (A.830).
4. Turn ON the control power supply again.
5. Check that the alarm display has been cleared and that the SERVOPACK operates normally.

4.7.4 Absolute Encoder Setup and Reinitialization

⚠ CAUTION

- The rotational data will be a value between -2 and +2 rotations when the absolute encoder setup is executed. The reference position of the machine system will change. Set the reference position of the host controller to the position after setup.
  If the machine is started without adjusting the position of the host controller, unexpected operation may cause injury or damage to the machine. Take sufficient care when operating the machine.

Setting up and reinitialization of the absolute encoder are necessary in the following cases.

- When starting the machine for the first time
- When an encoder backup error alarm (A.810) is generated
- When an encoder checksum error alarm (A.820) is generated
- When initializing the rotational serial data of the absolute encoder

Set up the absolute encoder with Fn008.

Note: The standard specification of the direct drive motor include an absolute encoder that shows values for a single rotation, so an encoder backup error alarm (A.810) will not occur for direct drive motors. Also, rotational serial data is always 0, so setting up the absolute encoder is not required.

(1) Precautions on Setup and Reinitialization

- The write prohibited setting parameter (Fn010) must be set to Write permitted (P.0000).
- Set up or reinitialize the encoder when the servomotor power is OFF.
- If the following absolute encoder alarms are displayed, cancel the alarm by using the same method as the set up (initializing) with Fn008. They cannot be canceled with the SERVOPACK Clear Warning or Alarm command (ALM_CLR).
  - Encoder backup error alarm (A.810)
  - Encoder checksum error alarm (A.820)
- Any other alarms (A.8□□) that monitor the inside of the encoder should be canceled by turning OFF the power.

(2) Procedure for Setup and Reinitialization

Follow the steps below to setup or reinitialize the absolute encoder.

This setting can be performed using the Write Memory command (MEM_WR). For details, refer to *Σ-V Series User's Manual MECHATROLINK-III Standard Servo Profile Commands* (No: SIEP S800000 63).

Step	Panel Display	Keys	Description
1	BB -FUNCTION- Fn006:AlmHist Clr Fn008:Mturn Clr Fn009:Ref Adj Fn00A:Vel Adj	MODE/SET ∧ ∨	Press the MODE/SET Key to select the utility function. And press the ∧ or ∨ Key to select the Fn008.
2	BB Multiturn Clear PGCL1	DATA	Press the DATA Key to view the execution display of Fn008.
3	BB Multiturn Clear PGCL5	∧	Keep pressing the ∧ Key until "PGCL1" is changed to "PGCL5."
4	BB Multiturn Clear PGCL5	DATA	Press the DATA Key to setup the absolute encoder. After completing the setup, "DONE" is flashed for approximately one second and "BB" is displayed.

(cont'd)

Step	Panel Display	Keys	Description
5	BB -FUNCTION- Fn006:AlmHist Clr Fn008:Mturn Clr Fn009:Ref Adj Fn00A:Vel Adj	MODE/SET	Press the MODE/SET Key to return to the display of the procedure 1.
6	To enable the change in the setting, turn the power OFF and ON again.		

4.7.5 Absolute Data Reception Sequence

The sequence in which the SERVOPACK receives outputs from the absolute encoder and transmits them to host controller is shown below.

(1) Outline of Absolute Data

The serial data, pulses, etc., of the absolute encoder that are output from the SERVOPACK are output from the PAO, PBO, and PCO signals as shown below.

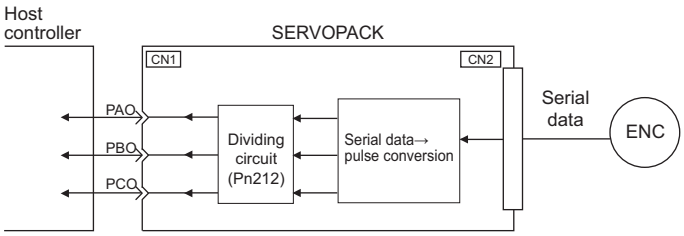

Signal Name	Status	Contents
PAO	At initialization	Rotational serial data Initial incremental pulses
	Normal Operations	Incremental pulses
PBO	At initialization	Initial incremental pulses
	Normal Operations	Incremental pulses
PCO	Always	Origin pulses

■ Phase-C Output Specifications

The pulse width of phase C (origin pulse) changes depending on the encoder output pulse (Pn212), becoming the same width as phase A.

The output timing is one of the following.

- Synchronized with the rising edge of phase A
- Synchronized with the falling edge of phase A
- Synchronized with the rising edge of phase B
- Synchronized with the falling edge of phase B

Note: When host controller receives the data of absolute encoder, do not perform counter reset using the output of PCO signal.

(2) Absolute Data Reception Sequence

1. Send the Turn Sensor ON (SENS_ON) command from the host controller.
2. After 100 ms, the system is set to rotational serial data reception standby and the incremental pulse up/down counter is cleared to zero.
3. Eight characters of rotational serial data is received.
4. The system enters a normal incremental operation state about 400 ms after the last rotational serial data is received.

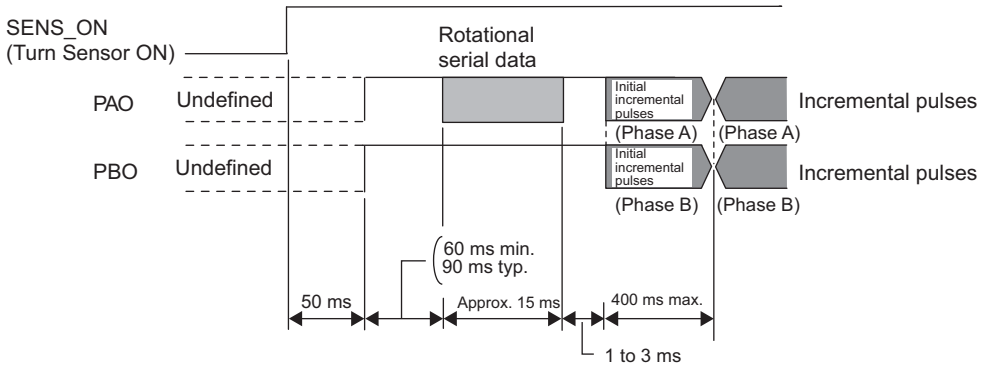

Note: The output pulses are phase-B advanced if the servomotor is turning forward regardless of the setting in Pn000.0.

Rotational serial data:
Indicates how many turns the motor shaft has made from the reference position, which was the position at setup.

Initial incremental pulses:
Initial incremental pulses which provide absolute data are the number of pulses required to rotate the motor shaft from the servomotor origin to the present position.
Just as with normal incremental pulses, these pulses are divided by the dividing circuit inside the SERVOPACK and then output.

The initial incremental pulse speed depends on the setting of the encoder output pulses (Pn212). Use the following formula to obtain the initial incremental pulse speed.

Setting of the Encoder Output Pulses (Pn212)	Formula of the Initial Incremental Pulse Speed
16 to 16384	$\frac{680 \times Pn212}{16384}$ [kpps]
16386 to 32768	$\frac{680 \times Pn212}{32768}$ [kpps]
32772 to 65536	$\frac{680 \times Pn212}{65536}$ [kpps]
65544 to 131072	$\frac{680 \times Pn212}{131072}$ [kpps]
131088 to 262144	$\frac{680 \times Pn212}{262144}$ [kpps]

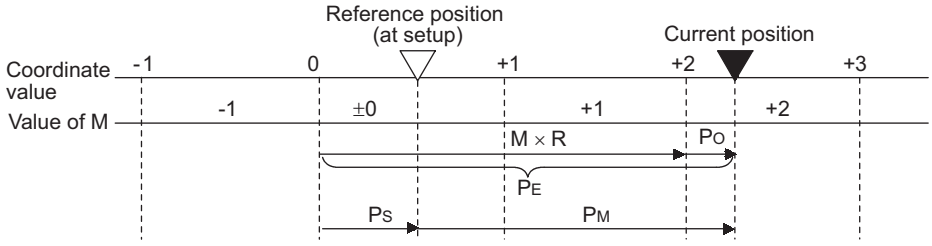

Final absolute data P_M is calculated by following formula.

$P_E = M \times R + P_O$

$P_S = M_S \times R + P_S'$

$P_M = P_E - P_S$

Signal	Meaning
P_E	Current value read by encoder
M	Rotational serial data
P_O	Number of initial incremental pulses
P_S	Absolute data read at setup (This is saved and controlled by the host controller.)
M_S	Rotational data read at setup
P_S'	Number of initial incremental pulses read at setup
P_M	Current value required for the user's system
R	Number of pulses per encoder revolution (pulse count after dividing, value of Pn212)

Note: The following formula applies in reverse mode. (Pn000.0 = 1)

$P_E = -M \times R + P_O$

$P_S = M_S \times R + P_S'$

$P_M = P_E - P_S$

(3) Rotational Serial Data Specifications and Initial Incremental Pulses

■ Rotational Serial Data Specifications

The rotational serial data is output from PAO signal.

Data Transfer Method	Start-stop Synchronization (ASYNC)
Baud rate	9600 bps
Start bits	1 bit
Stop bits	1 bit
Parity	Even
Character code	ASCII 7-bit code
Data format	8 characters, as shown below. 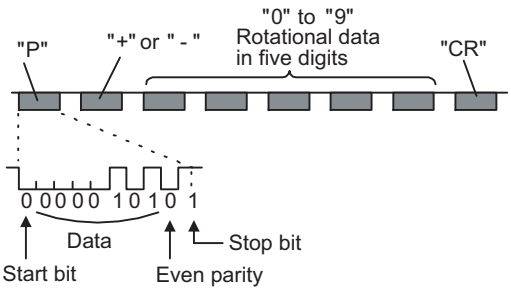 Note 1. Data is "P+00000" (CR) or "P-00000" (CR) when the number of revolutions is zero. 2. The revolution range is "-32768" to "+32767". When this range is exceeded, the data changes from "+32767" to "-32678" or from "-32678" to "+32767". When changing multiturn limit, the range changes. For details, refer to *4.7.6 Multiturn Limit Setting*.

■ Initial Incremental Pulses

The initial incremental pulses are output after division inside the SERVOPACK in the same way as for normal incremental pulses. Refer to *4.4.4 Encoder Output Pulses* for details.

(4) Transferring Alarm Contents

If an absolute encoder is used, the contents of alarms detected by the SERVOPACK are transmitted in serial data to the host controller from the PAO output when the Turn Sensor OFF command (SENS_OFF) is received.

Note: The SENS_OFF command cannot be received while the servomotor power is ON.

Output example of alarm contents are as shown below.

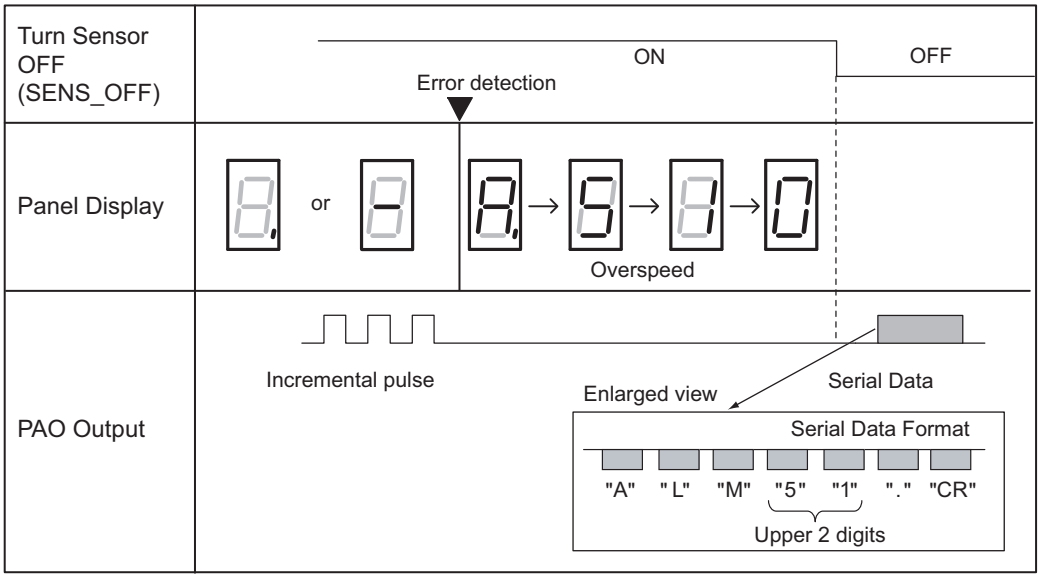

4.7.6 Multiturn Limit Setting

The multiturn limit setting is used in position control applications for a turntable or other rotating device. For example, consider a machine that moves the turntable in the following diagram in only one direction.

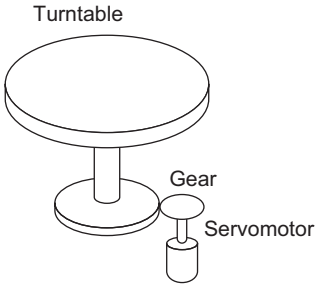

Because the turntable moves in only one direction, the upper limit for revolutions that can be counted by an absolute encoder will eventually be exceeded. The multiturn limit setting is used in cases like this to prevent fractions from being produced by the integral ratio of the motor revolutions and turntable revolutions.

For a machine with a gear ratio of n:m, as shown above, the value of m minus 1 will be the setting for the multiturn limit setting (Pn205).

Multiturn limit setting (Pn205) = m-1

The case in which the relationship between the turntable revolutions and motor revolutions is m = 100 and n = 3 is shown in the following graph.

Pn205 is set to 99.

Pn205 = 100 – 1 = 99

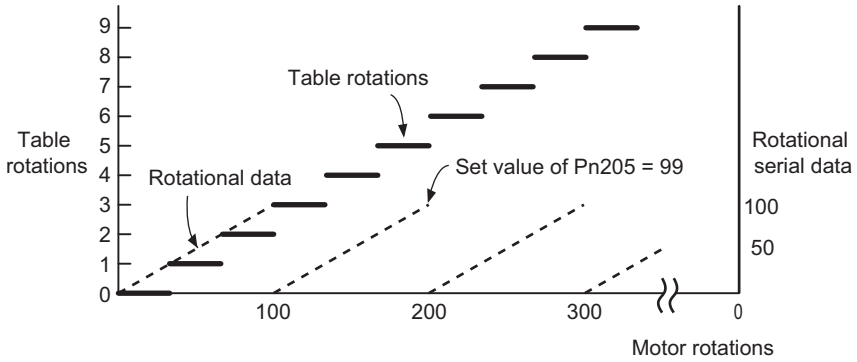

Pn205	Multiturn Limit Setting			Speed Position Torque	Classification
	Setting Range	Setting Unit	Factory Setting	When Enabled	
	0 to 65535	1 Rev	65535	After restart	Setup

Note: This parameter is valid when the absolute encoder is used.

The range of the data will vary when this parameter is set to anything other than the factory setting.

1. When the motor rotates in the reverse direction with the rotational data at 0, the rotational data will change to the setting of Pn205.
2. When the motor rotates in the forward direction with the rotational data at the Pn205 setting, the rotational data will change to 0.

Set the value, the desired rotational amount -1, to Pn205.

Factory Setting (= 65535)	Other Setting (≠65535)
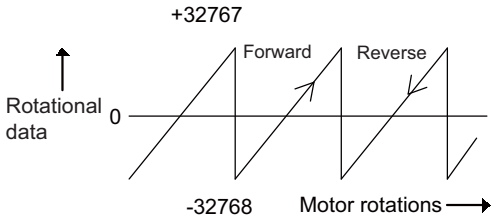	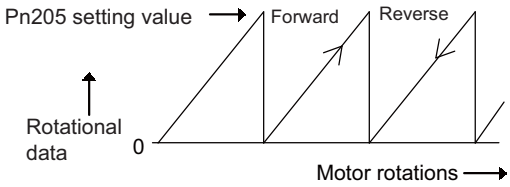

Note: The standard specification of the direct drive motor include an absolute encoder that shows values for a single rotation, so the multiturn data (rotational serial data) for the encoder is always 0. The absolute value of the load side can be created with the motor shaft angle only even when constructing an absolute position detecting system because the servomotor and the load can be directly connected.

4.7.7 Multiturn Limit Disagreement Alarm (A.CC0)

When the multiturn limit set value is changed with parameter Pn205, a multiturn limit disagreement alarm (A.CC0) will be displayed because the value differs from that of the encoder.

Alarm Display	Alarm Name	Alarm Output	Meaning
A.CC0	Multiturn Limit Disagreement	OFF (H)	Different multiturn limits have been set in the encoder and SERVOPACK.

If this alarm is displayed, perform the operation described below and change the multiturn limit value in the encoder to the value set in Pn205.

This setting can be performed using the Write Memory command (MEM_WR). For details, refer to *Σ-V Series User's Manual MECHATROLINK-III Standard Servo Profile Commands* (No: SIEP S800000 63).

Step	Display after Operation	Keys	Operation
1	A.CC0 -FUNCTION- Fn012:Soft Ver Fn013:MturnLmSet Fn014:Opt Init Fn01B:Viblvl Init	MODE/SET ∧ ∨	Press the MODE/SET Key to select the utility function. And press the ∧ or ∨ Key to select the Fn013.
2	A.CC0 Multiturn Limit Set Start :[DATA] Return:[SET]	DATA	Press the DATA Key to view the execution display of Fn013. Note: If the display is not switched and "NO-OP" is displayed in the status display, the Write Prohibited Setting (Fn010 = 0001) is set. Check the setting and reset.
3	A.CC0 Multiturn Limit Set Start :[DATA] Return:[SET]	DATA MODE/SET	Press the DATA Key to set the multiturn limit value. When the setting is completed, the status display shows "DONE" for one second. The status display then returns to show "A.CC0" again. Note: If the MODE/SET Key is pressed instead of the DATA Key, the multiturn limit value will not be reset.
4	A.CC0 -FUNCTION- Fn012:Soft Ver Fn013:MturnLmSet Fn014:Opt Init Fn01B:Viblvl Init	MODE/SET	Press the MODE/SET Key to return to the display the procedure 1.
5	To enable the change in the setting, turn the power OFF and ON again.		

4.7.8 Absolute Encoder Origin Offset

If using the absolute encoder, the positions of the encoder and the offset of the machine coordinate system (APOS) can be set. Use Pn808 to make the setting. After the SENS_ON command is received by MECHATROLINK communications, this parameter will be enabled.

Pn808	Absolute Encoder Origin Offset		Position		Classification
	Setting Range	Setting Unit	Factory Setting	When Enabled	
	-1073741823 to 1073741823	1 reference unit	0	Immediately	Setup

<Example>

If the encoder position (X) is set at the origin of the machine coordinate system (0), Pn808 = X.

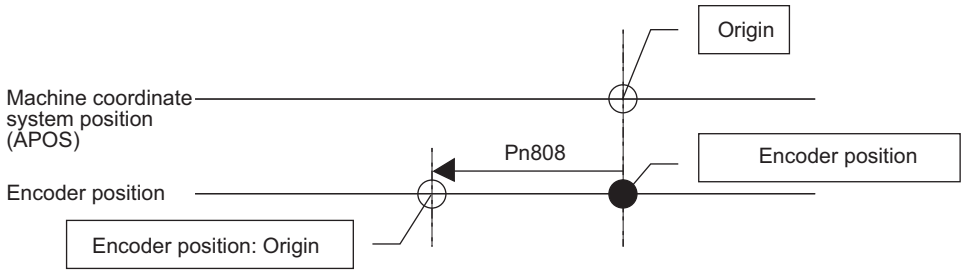

4.8 Other Output Signals

This section explains other output signals.

Use these signals according to the application needs, e.g., for machine protection.

4.8.1 Servo Alarm Output Signal (ALM)

This section describes signals that are output when the SERVOPACK detects errors and resetting methods.

(1) Servo Alarm Output Signal (ALM)

This signal is output when the SERVOPACK detects an error.

> **IMPORTANT**
> Configure an external circuit so that this alarm output turns OFF the main circuit power supply for the SERVOPACK whenever an error occurs.

Type	Signal Name	Connector Pin Number	Setting	Meaning
Output	ALM	CN1-3, 4	ON (closed)	Normal SERVOPACK status
			OFF (open)	SERVOPACK alarm status

(2) Alarm Reset Method

If a servo alarm (ALM) occurs, use one of the following methods to reset the alarm after eliminating the cause of the alarm.

> **IMPORTANT**
> Be sure to eliminate the cause of the alarm before resetting it.
> If the alarm is reset and operation continued without eliminating the cause of the alarm, it may result in damage to the equipment or fire.

■ Resetting Alarms by Sending Clear Warning or Alarm Command (ALM_CLR)

For details, refer to *Σ-V Series User's Manual, MECHATROLINK-III Standard Servo Profile Commands* (No.: SIEP S800000 63).

■ Resetting Alarms Using the Digital Operator

Press the ALARM RESET Key on the digital operator. For details, refer to *Σ-V Series User's Manual, Operation of Digital Operator* (No.: SIEP S800000 55).

4.8.2 Warning Output Signal (/WARN)

This signal is for a warning issued before the occurrence of an alarm.
Refer to *9.2.1 List of Warnings*.

(1) Signal Specifications

Type	Signal Name	Connector Pin Number	Setting	Meaning
Output	/WARN	Must be allocated	ON (closed)	Warning status
			OFF (open)	Normal status

Note: Use parameter Pn50F.3 to allocate the /WARN signal for use. For details, refer to *3.3.2 Output Signal Allocations*.

4.8.3 Rotation Detection Output Signal (/TGON)

This output signal indicates that the servomotor is rotating at the speed set for Pn502 or a higher speed.

(1) Signal Specifications

Type	Signal Name	Connector Pin Number	Setting	Meaning
Output	/TGON	Must be allocated	ON (closed)	Servomotor is rotating with the motor speed above the setting in Pn502.
			OFF (open)	Servomotor is rotating with the motor speed below the setting in Pn502.

Note: Use parameter Pn50E.2 to allocate the /TGON signal for use. For details, refer to *3.3.2 Output Signal Allocations*.

(2) Related Parameter

Set the range in which the /TGON signal is output using the following parameter.

Pn502	Rotation Detection Level			Speed Position Torque	Classification
	Setting Range	Setting Unit	Factory Setting	When Enabled	
	1 to 10000	1 min^{-1}	20	Immediately	Setup

4.8.4 Servo Ready Output Signal (/S-RDY)

This signal is turned ON when the SERVOPACK is ready to accept the servo ON (SV_ON) command.

The /S-RDY signal is turned ON under the following conditions.

- The main circuit power supply is ON.
- No hard wire base block state
- No servo alarms
- The Turn Sensor ON (SENS_ON) command is received. (When an absolute encoder is used.)

If an absolute encoder is used, the output of absolute data to the host controller must have been completed when the SENS_ON command is received.

For details on the hard wire base block function, refer to *4.9.1 Hard Wire Base Block (HWBB) Function*.

(1) Signal Specifications

Type	Signal Name	Connector Pin Number	Setting	Meaning
Output	/S-RDY	Must be allocated	ON (closed)	The SERVOPACK is ready to accept the SV_ON command.
			OFF (open)	The SERVOPACK is not ready to accept the SV_ON command.

Note 1. Use parameter Pn50E.3 to allocate the /S-RDY signal for use. For details, refer to *3.3.2 Output Signal Allocations*.
2. For details on the hard wire base block function and the servo ready output signal, refer to *4.9.1 Hard Wire Base Block (HWBB) Function*.

4.8.5 Speed Coincidence Output Signal (/V-CMP)

The speed coincidence output signal (/V-CMP) is output when the actual servomotor speed is the same as the reference speed. The host controller uses the signal as an interlock. This signal is the output signal during speed control.

Type	Signal Name	Connector Pin Number	Setting	Meaning
Output	/V-CMP	Must be allocated	ON (closed)	Speed coincides.
			OFF (open)	Speed does not coincide.

Note: Use parameter Pn50E.1 to allocate the /V-CMP signal for use. Refer to *3.3.2 Output Signal Allocations* for details.

Pn503	Speed Coincidence Signal Output Width Speed				Classification
	Setting Range	Setting Unit	Factory Setting	When Enabled	
	0 to 100	1 min^{-1}	10	Immediately	Setup

The /V-CMP signal is output when the difference between the reference speed and actual motor speed is below this setting.

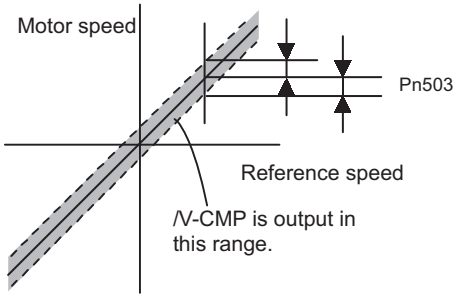

<Example>

The /V-CMP signal is output at 1900 to 2100 min^{-1} if the Pn503 is set to 100 and the reference speed is 2000 min^{-1}.

4.8.6 Positioning Completed Output Signal (/COIN)

This signal indicates that servomotor movement has been completed during position control.

When the difference between the number of references output by the host controller and the travel distance of the servomotor (position error) drops below the set value in the parameter, the positioning completion signal will be output.

Use this signal to check the completion of positioning from the host controller.

Type	Signal Name	Connector Pin Number	Setting	Meaning
Output	/COIN	Must be allocated	ON (closed)	Positioning has been completed.
			OFF (open)	Positioning is not completed.

Note: Use parameter Pn50E.0 to allocate the /COIN signal for use. Refer to *3.3.2 Output Signal Allocations* for details.

Pn522	Positioning Completed Width			Position	Classification
	Setting Range	Setting Unit	Factory Setting	When Enabled	
	0 to 1073741824	1 reference unit	7	Immediately	Setup

The positioning completed width setting has no effect on final positioning accuracy.

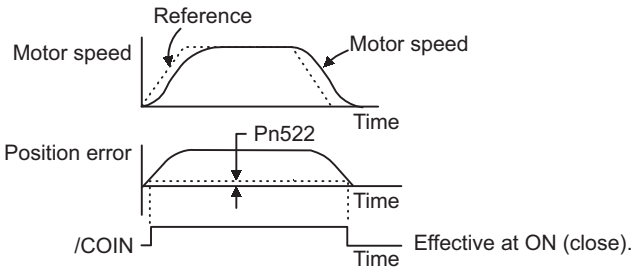

Note: If the parameter is set to a value that is too large, a positioning completed signal might be output if the position error is low during a low speed operation. This will cause the positioning completed signal to be output continuously. If this signal is output unexpectedly, reduce the set value until it is no longer output.

If the position error is kept to a minimum when the positioning completed width is small, use Pn207.3 to change output timing for the /COIN signal.

Parameter		Name	Meaning	When Enabled	Classification
Pn207	n.0□□□ [Factory setting]	/COIN Output Timing	When the absolute value of the position error is below the positioning completed width (Pn522).	After restart	Setup
	n.1□□□		When the absolute value of the position error is below the positioning completed width (Pn522), and the reference after applying the position reference filter is 0.		
	n.2□□□		When the absolute value of the position error is below the positioning completed width (Pn522), and the position reference input is 0.		

4.8.7 Positioning Near Output Signal (/NEAR)

Before confirming that the positioning completed signal has been received, the host controller first receives a positioning near signal and can prepare the operating sequence after positioning has been completed. The time required for this sequence after positioning can be shortened.

This signal is generally used in combination with the positioning completed output signal.

Type	Signal Name	Connector Pin Number	Setting	Meaning
Output	/NEAR	Must be allocated	ON (closed)	The servomotor has reached a point near to positioning completed.
			OFF (open)	The servomotor has not reached a point near to positioning completed.

Note: Use parameter Pn510.0 to allocate the /NEAR signal for use. Refer to *3.3.2 Output Signal Allocations* for details.

Pn524	NEAR Signal Width			Position	Classification
	Setting Range	Setting Unit	Factory Setting	When Enabled	
	1 to 1073741824	1 reference unit	1073741824	Immediately	Setup

The positioning near signal (/NEAR) is output when the difference between the number of references output by the host controller and the travel distance of the servomotor (position error) is less than the set value.

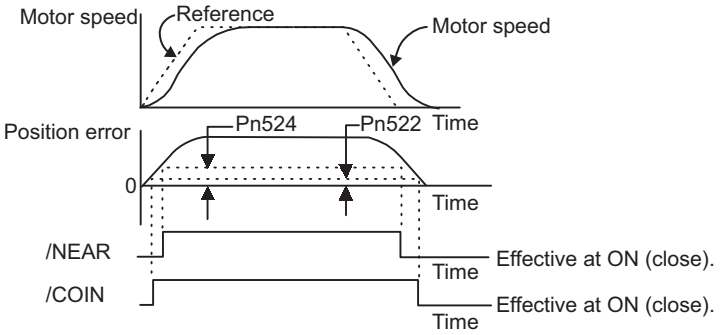

Note: Normally, the value of Pn524 should be larger than that for the positioning completed width (Pn522).

4.8.8 Speed Limit Detection Signal (/VLT)

This function limits the speed of the servomotor to protect the machine.

A servomotor in torque control is controlled to output the specified torque, but the motor speed is not controlled. Therefore, if an excessive reference torque is set for the load torque on the machinery side, the speed of the servomotor may increase greatly. If that may occur, use this function to limit the speed.

Note: The actual limit value of motor speed depends on the load conditions of the servomotor.

With No Speed Limit	With Speed Limit
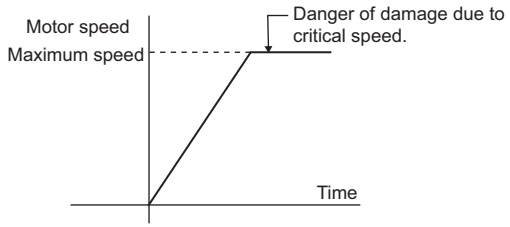	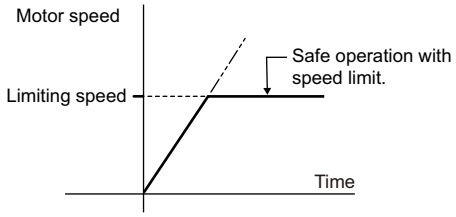

Refer to the following parameters for speed limit.

(1) Signals Output during Servomotor Speed Limit

The following signal is output when the motor speed reaches the limit speed.

Type	Signal Name	Connector Pin Number	Setting	Meaning
Output	/VLT	Must be allocated	ON (closed)	Servomotor speed limit being applied.
			OFF (open)	Servomotor speed limit not being applied.

Note: Use parameter Pn50F.1 to allocate the /VLT signal for use. For details, refer to *3.3.2 Output Signal Allocations*.

(2) Speed Limit Setting

Select the speed limit mode with Pn002.1.

Parameter		Meaning	When Enabled	Classification
Pn002	n.□□0□ [Factory setting]	VLIM (the speed limit value during torque control) is not available. Uses the value set in Pn407 as the speed limit (internal speed limit function).	After restart	Setup
	n.□□1□	VLIM operates as the speed limit value (external speed limit function).		

■ Internal Speed Limit Function

If the internal speed limit function is selected in Pn002.1, set the limit of the maximum speed of the servomotor in Pn407. The limit of the speed in Pn408.1 can be either the maximum speed of the servomotor or the overspeed alarm detection speed. Select the overspeed alarm detection speed to limit the speed to the maximum speed of the servomotor or the equivalent.

Pn407	Speed Limit During Torque Control Torque				Classification
	Setting Range	Setting Unit	Factory Setting	When Enabled	
	0 to 10000	1 min^{-1}	10000	Immediately	Setup

Note: The servomotor's maximum speed or the overspeed alarm detection speed will be used when the setting in this parameter exceeds the maximum speed of the servomotor used.

Parameter		Meaning	When Enabled	Classification
Pn408	n.□□0□ [Factory setting]	Uses the smaller value of the maximum motor speed and the value of Pn407 as the speed limit value.	After restart	Setup
	n.□□1□	Uses the smaller value of the overspeed alarm detection speed and the value of Pn407 as speed limit value.		

■ External Speed Limit Function

If the external speed limit function is selected in Pn002.1, the motor speed is controlled by the speed limit value (VLIM). For details, refer to *Σ-V Series User's Manual, MECHATROLINK-III Standard Servo Profile Commands* (No.: SIEP S800000 63).

4.9 Safety Function

The safety function is incorporated in the SERVOPACK to reduce the risk associated with the machine by protecting workers from injury and by securing safe machine operation. Especially when working in hazardous areas inside the safeguard, as for machine maintenance, it can be used to avoid adverse machine movement.

4.9.1 Hard Wire Base Block (HWBB) Function

The Hard Wire Base Block function (hereinafter referred to as HWBB function) is a safety function designed to baseblock the servomotor (shut off the motor current) by using the hardwired circuits. Each circuit for two channel input signals blocks the run signal to turn off the power module that controls the motor current, and the motor current is shut off. (Refer to the diagram below.)

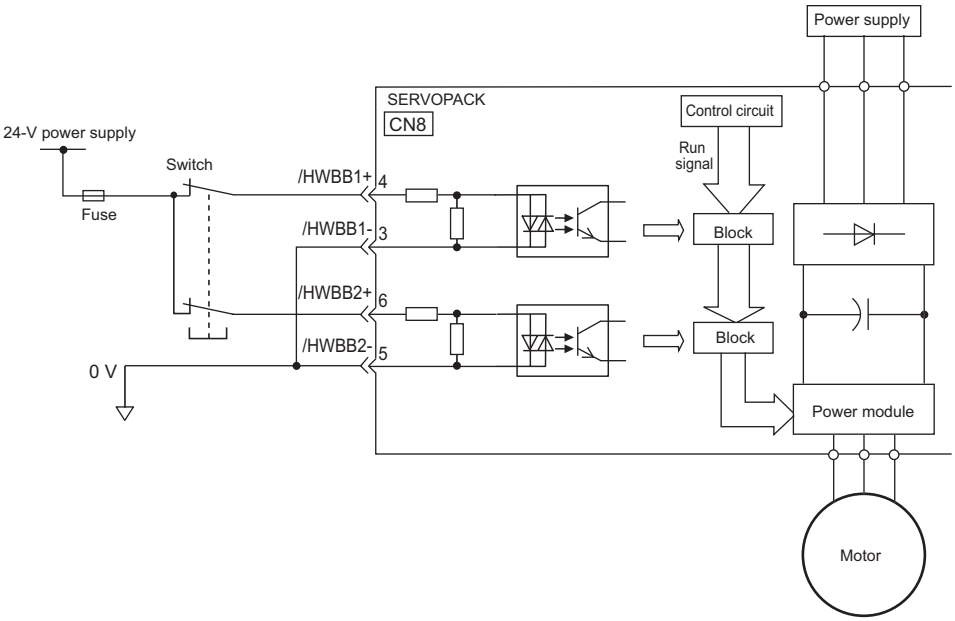

IMPORTANT

For safety function signal connections, the input signal is the 0 V common and the output signal is the source output. This is the opposite of other signals described in this manual. To avoid confusion, the ON and OFF status of signals for safety functions are defined as follows:

ON: The state in which the relay contacts are closed or the transistor is ON and current flows into the signal line.

OFF: The state in which the relay contacts are open or the transistor is OFF and no current flows into the signal line.

(1) Risk Assessment

When using the HWBB function, be sure to perform a risk assessment of the servo system in advance. Make sure that the safety level of the standards is met. For details about the standards, refer to *Harmonized Standards* at the front of this manual.

Note: To meet the performance level d (PLd) in EN ISO 13849-1, the EDM signal must be monitored by a host controller. If the EDM signal is not monitored by a host controller, the system only qualifies for the performance level c (PLc).

The following risks can be estimated even if the HWBB function is used. These risks must be included in the risk assessment.

- The servomotor will move in an application where external force is applied to the servomotor (for example, gravity on the vertical axis). Take measures to secure the servomotor, such as installing a mechanical brake.
- The servomotor may move within the electric angle of 180 degrees in case of the power module failure, etc. Make sure that safety is ensured even in that situation. The rotation angle depends on the motor type. The maximum rotation angle is given below.
  Rotational motor: 1/6 rotation max. (rotation angle at the motor shaft)
  Direct drive motor:1/20 rotation max. (rotation angle at the motor shaft)

- The HWBB function does not shut off the power to the SERVOPACK or electrically isolate it. Take measures to shut off the power to the SERVOPACK when performing maintenance on it.

(2) Hard Wire Base Block (HWBB) State

The SERVOPACK will be in the following state if the HWBB function operates. If the /HWBB1 or /HWBB2 signal is OFF, the HWBB function will operate and the SERVOPACK will enter a hard wire baseblock (HWBB) state.

The HWBB function operates after the servomotor power is turned OFF.

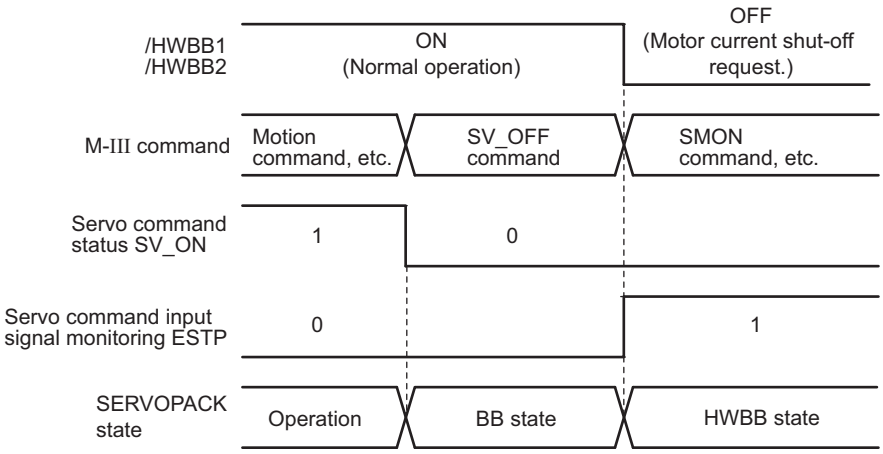

The HWBB function operates while the servomotor power is ON.

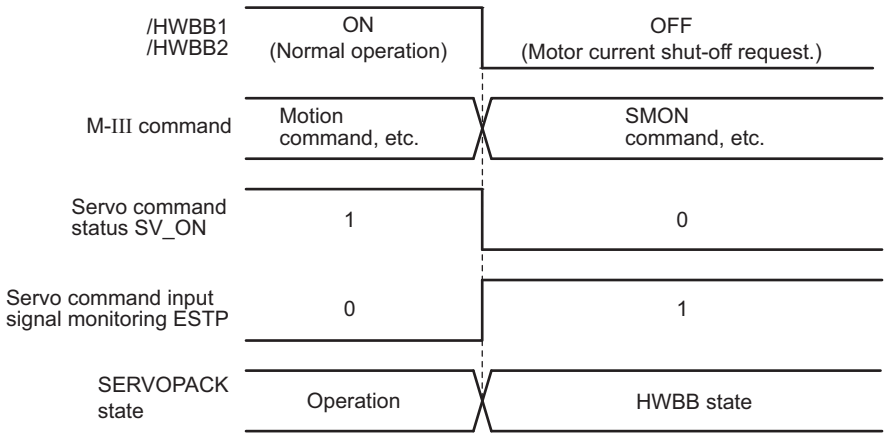

(3) Resetting the HWBB State

Usually after the servo OFF command (SV_OFF: 32H) is received and the servomotor power is OFF, the SERVOPACK will then enter a hard wire baseblock (HWBB) state with the /HWBB1 and /HWBB2 signals turned OFF. By then turning the /HWBB1 and /HWBB2 signals ON in this state, the SERVOPACK will enter a baseblock (BB) state and can accept the servo ON command (SV_ON: 31H).

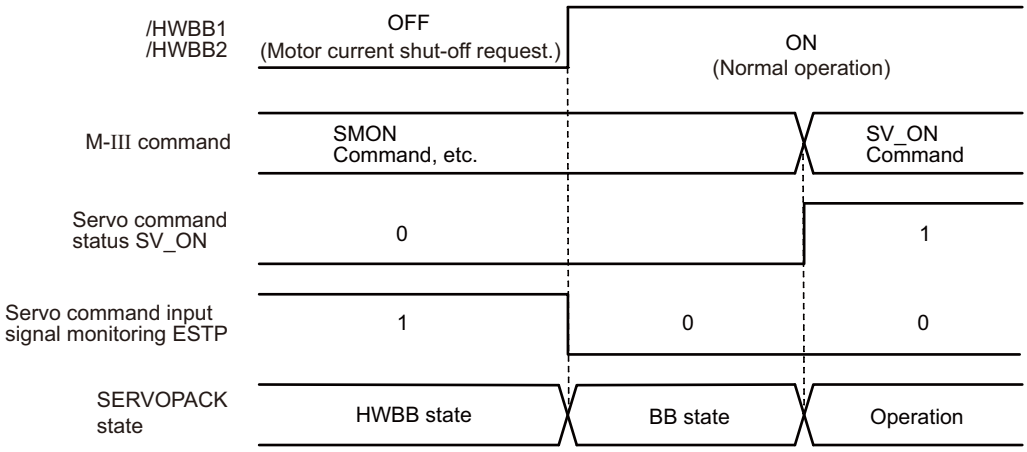

If the /HWBB1 and /HWBB2 signals are OFF and the servo ON command is received, the HWBB state will be maintained after the /HWBB1 and /HWBB2 signals are turned ON.

Send the servo OFF command, and the SERVOPACK is placed in a BB state. Then send the servo ON command again.

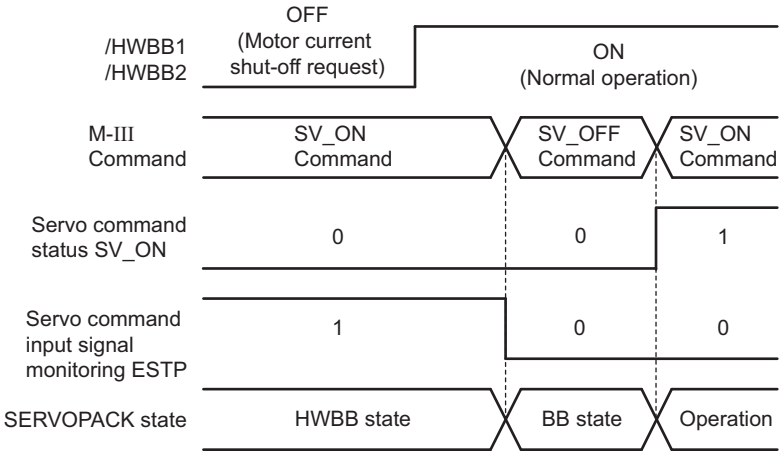

Note: Even if the servomotor power is turned OFF by turning OFF the main circuit power, the HWBB status is retained until a servo OFF command is received.

(4) Related Commands

If the HWBB function is working with the /HWBB1 or /HWBB2 signal turned OFF, the setting of ESTP of the servo command input signal monitoring changes to 1, so the status of the upper level apparatus can be known by looking at the setting of this bit.

If the status becomes HWBB status during the execution of the next command, a command warning is issued. If a warning is given, clear the alarm to return to normal operational status. After stopping or canceling the action command, using the sequence of commands to return to the HWBB status is recommended.

Object Action Commands
Servo ON (SV_ON)
Interpolating (INTERPORATE)
Positioning (POSING)
Constant speed feed (FEED)
Constant speed feed with position detection function (EX_FEED)
Interpolating with position detection function (LATCH)
External input positioning (EX_POSING)
Homing (ZRET)

(5) Error Detection in HWBB Signal

If only the /HWBB1 or /HWBB2 signal is input, an A.Eb1 alarm (Safety Function Signal Input Timing Error) will occur unless the other signal is input within 10 seconds. This makes it possible to detect failures, such as disconnection of the HWBB signals.

⚠ CAUTION

- The safety function signal input timing error alarm (A.Eb1) is not a safety-related part of a control system. Keep this in mind in the system design.

(6) Connection Example and Specifications of Input Signals (HWBB Signals)

The input signals must be redundant. A connection example and specifications of input signals (HWBB signals) are shown below.

> **IMPORTANT**
>
> For safety function signal connections, the input signal is the 0 V common and the output signal is the source output. This is opposite to other signals described in this manual. To avoid confusion, the ON and OFF status of signals for safety functions are defined as follows:
>
> ON: The state in which the relay contacts are closed or the transistor is ON and current flows into the signal line.
>
> OFF: The state in which the relay contacts are open or the transistor is OFF and no current flows into the signal line.

■ Connection Example

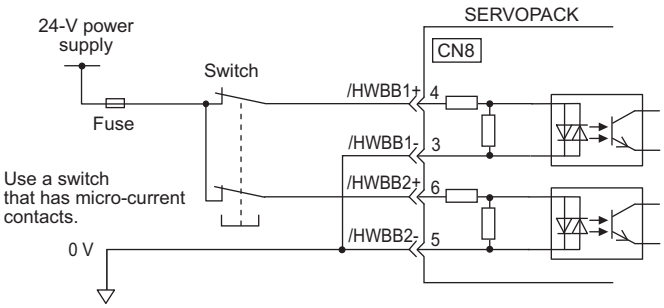

■ Specifications

Type	Signal Name	Connector Pin Number	Setting	Meaning
Input	/HWBB1	CN8-4 CN8-3	ON (closed)	Does not use the HWBB function. (normal operation)
			OFF (open)	Uses the HWBB function. (motor current shut-off request)
	/HWBB2	CN8-6 CN8-5	ON (closed)	Does not use the HWBB function. (normal operation)
			OFF (open)	Uses the HWBB function. (motor current shut-off request)

The input signals (HWBB signals) have the following electrical characteristics.

Items	Characteristics	Remarks
Internal Impedance	3.3 kΩ	–
Operation Movable Voltage Range	+11 V to + 25 V	–
Maximum Delay Time	20 ms	Time from the /HWBB1 and /HWBB2 signals are OFF to the HWBB function operates.

If the HWBB function is requested by turning OFF the /HWBB1 and /HWBB2 input signals on the two channels, the power supply to the servomotor will be turned OFF within 20 ms (see below).

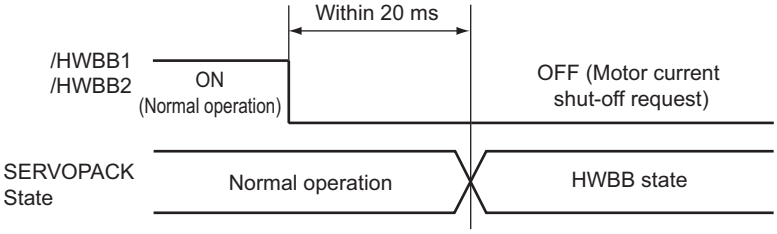

Note 1. The OFF status is not recognized if the total OFF time of the /HWBB1 and /HWBB2 signals is 0.5 ms or shorter.
2. The status of the input signals can be checked using monitor displays. Refer to *7.5 Monitoring Safety Input Signals*.

(7) Operation with Utility Functions

The HWBB function works while the SERVOPACK operates in the utility function.

If any of the following utility functions is being used with the /HWBB1 and /HWBB2 signals turned OFF, the SERVOPACK cannot be operated by turning ON the /HWBB1 and /HWBB2 signals. Cancel the utility function first, and then set the SERVOPACK to the utility function again and restart operation.

- JOG operation (Fn002)
- Origin search (Fn003)
- Program JOG operation (Fn004)
- Advanced autotuning (Fn201)
- EasyFFT (Fn206)
- Automatic offset-signal adjustment of motor current detection signal (Fn00E)

(8) Servo Ready Output (/S-RDY)

The servo ON (SV_ON) command will not be accepted in the HWBB state. Therefore, the servo ready output will turn OFF. The servo ready output will turn ON if the servomotor power is OFF (set to BB state) when both the /HWBB1 and /HWBB2 signals are ON.

The following diagram shows an example where the main circuit power supply is turned ON, the Turn Sensor ON (SENS_ON) command is sent (with an absolute encoder), and no servo alarm occurs.

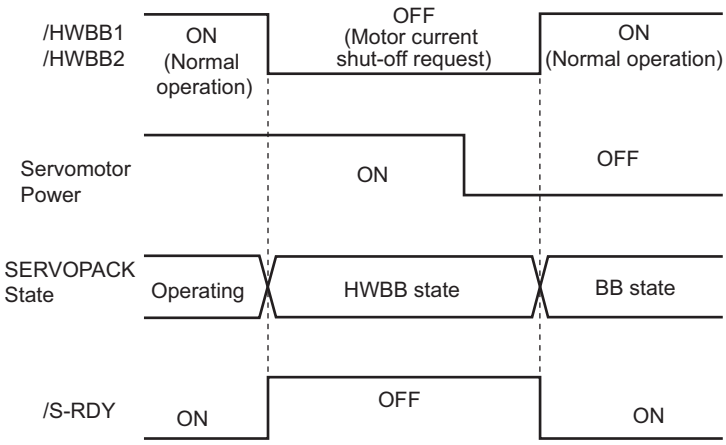

(9) Brake Signal (/BK)

When the /HWBB1 or /HWBB2 signal is OFF and the HWBB function operates, the brake signal (/BK) will turn OFF. At that time, Pn506 (brake reference - servo OFF delay time) will be disabled. Therefore, the servomotor may be moved by external force until the actual brake becomes effective after the brake signal (/BK) turns OFF.

⚠ CAUTION

- The brake signal is not a safety-related part of a control system. Be sure to design the system so that the system will not be put into danger if the brake signal fails in the HWBB state. Moreover, if a servomotor with a brake is used, keep in mind that the brake for the servomotor is used only to prevent the movable part from being moved by gravity or an external force and it cannot be used to brake the servomotor.

(10) Dynamic Brake

If the dynamic brake is enabled in Pn001.0 (Stopping Method for Servomotor after SV_OFF Command is Received), the servomotor will come to a stop under the control of the dynamic brake when the HWBB function works while the /HWBB1 or /HWBB2 signal is OFF.

⚠ CAUTION

- The dynamic brake is not a safety-related part of a control system. Be sure to design the system so that the system will not be put into danger if the servomotor coasts to a stop in the HWBB state. Usually, use a sequence in which the HWBB state occurs after the servomotor is stopped using the reference.
- If the application frequently uses the HWBB function, do not use the dynamic brake to stop the servomotor. Otherwise element deterioration in the SERVOPACK may result. To prevent internal elements from deteriorating, use a sequence in which the HWBB state occurs after the servomotor has come to a stop.

(11) Servo Alarm Output Signal (ALM)

In the HWBB state, the servo alarm output signal (ALM) is not sent.

4.9.2 External Device Monitor (EDM1)

The external device monitor (EDM1) functions to monitor failures in the HWBB function. Connect the monitor to feedback signals to the safety function device.

Note: To meet the performance level d (PLd) in EN ISO13849-1, the EDM signal must be monitored by a host controller. If the EDM signal is not monitored by a host controller, the system only qualifies for the performance level c (PLc).

■ Failure Detection Signal for EDM1 Signal

The relation of the EDM1, /HWBB1, and /HWBB2 signals is shown below.

Detection of failures in the EDM1 circuit can be checked using the following four status of the EDM1 signal in the table. Failures can be detected if the failure status can be confirmed, e.g., when the power supply is turned ON.

Signal Name	Logic			
/HWBB1	ON	ON	OFF	OFF
/HWBB2	ON	OFF	ON	OFF
EDM1	OFF	OFF	OFF	ON

⚠ WARNING

- The EDM1 signal is not a safety output. Use it only for monitoring a failure.

(1) Connection Example and Specifications of EDM1 Output Signal

Connection example and specifications of EDM1 output signal are explained below.

> **IMPORTANT**
>
> For safety function signal connections, the input signal is the 0 V common and the output signal is the source output. This is opposite to other signals described in this manual. To avoid confusion, the ON and OFF status of signals for safety functions are defined as follows:
>
> ON: The state in which the relay contacts are closed or the transistor is ON and current flows into the signal line.
>
> OFF: The state in which the relay contacts are open or the transistor is OFF and no current flows into the signal line.

■ Connection Example

EDM1 output signal is used for source circuit.

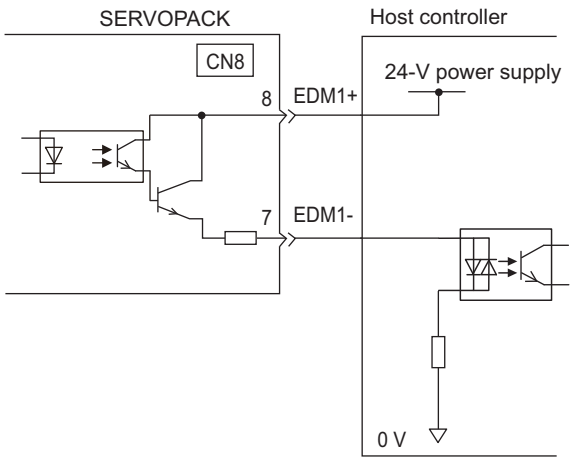

■ Specifications

Type	Signal Name	Connector Pin Number	Setting	Meaning
Output	EDM1	CN8-8 CN8-7	ON (closed)	Both the /HWBB1 and the /HWBB2 signals are working normally.
			OFF (open)	The /HWBB1 signal, the /HWBB2 signal or both are not working normally.

Electrical characteristics of EDM1 signal are as follows.

Items	Characteristics	Remarks
Maximum Allowable Voltage	30 VDC	–
Maximum Current	50 mADC	–
Maximum Voltage Drop at ON	1.0 V	Voltage between EDM1+ and EDM1- when current is 50 mA
Maximum Delay Time	20 ms	Time from the change in /HWBB1 or /HWBB2 until the change in EDM1

4.9.3 Application Example of Safety Functions

An example of using safety functions is shown below.

(1) Connection Example

In the following example, a safety unit is used and the HWBB function operates when the guard opens.

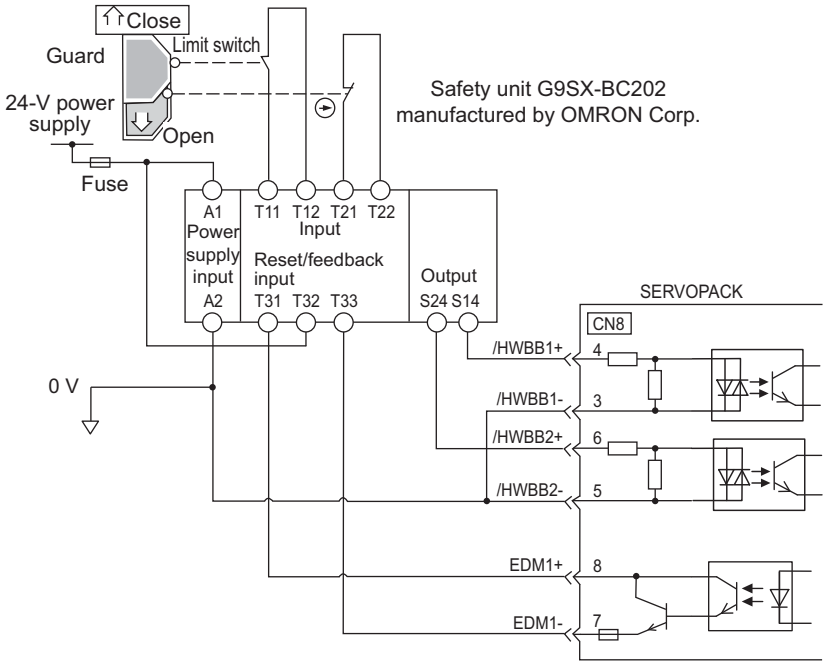

When a guard opens, both of signals, the /HWBB1 and the /HWBB2, turn OFF, and the EDM1 signal turns ON. Since the feedback is ON when the guard closes, the safety unit is reset, and the /HWBB1 and the /HWBB2 signals turn ON, and the operation becomes possible.

Note: The EDM1 signal is used as a sourcing output. Connect the EDM1 so that the current flows from EMD1+ to EMD1-.

(2) Failure Detection Method

In case of a failure such as the /HWBB1 or the /HWBB2 signal remains ON, the safety unit is not reset when the guard closes because the EDM1 signal keeps OFF. Therefore starting is impossible, then the failure is detected.

In this case, an error in the external device, disconnection or short-circuiting of the external wiring, or a failure in the SERVOPACK must be considered. Find the cause and correct the problem.

(3) Procedure

1	Request to open the guard.
2	When the servomotor is operating, the host controller stops the servomotor and sends the servo OFF command (SV_OFF).
3	Open the guard and enter.
4	The /HWBB1 and /HWBB2 signals are OFF and HWBB function operates. (The operation in the guard is available.)
5	After completing the operation, leave and close the guard.
6	The host controller sends the servo ON command (SV_ON).

4.9.4 Confirming Safety Functions

When starting the equipment or replacing the SERVOPACK for maintenance, be sure to conduct the following confirmation test on the HWBB function after wiring.

- Confirm that the SERVOPACK enters a hard wire base block state and that the servomotor does not operate when the /HWBB1 and /HWBB2 signals are OFF.
- Check the ON/OFF states of the /HWBB1 and /HWBB2 signals with Un015.
  → If the ON/OFF states of the signals do not coincide with the display, an error in the external device, disconnection or short-circuiting of the external wiring, or a failure in the SERVOPACK must be considered. Find the cause and correct the problem.
- Check with the display of the feedback circuit input of the connected device to confirm that the EDM1 signal is OFF while in normal operation.

4.9.5 Connecting a Safety Function Device

There are two types of the safety function's jumper connectors that are attached to SERVOPACKs. You must remove the safety function's jumper connector before connecting a safety function device. The connection method depends on the connector type that is used. Read the following procedures well before you attach a safety function device.

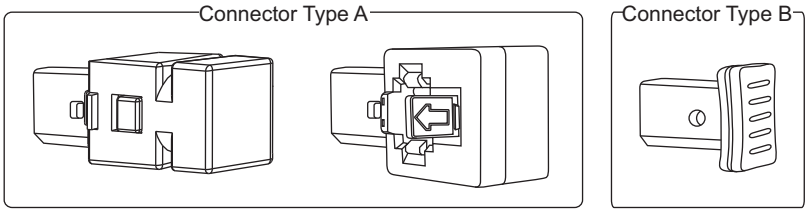

Use the following procedures to attach safety function devices.

(1) Connector Type A

1. Remove the servomotor connection terminal connector while pressing the lock.

Applicable SERVOPACKs:
SGDV-R70F, -R90F, -2R1F, -R70A, -R90A, -1R6A, -2R8A, -1R9D, -3R5D, -5R4D
For SERVOPACK models not listed above, it is not necessary to remove the servomotor connection terminal connector. Go to step 2.

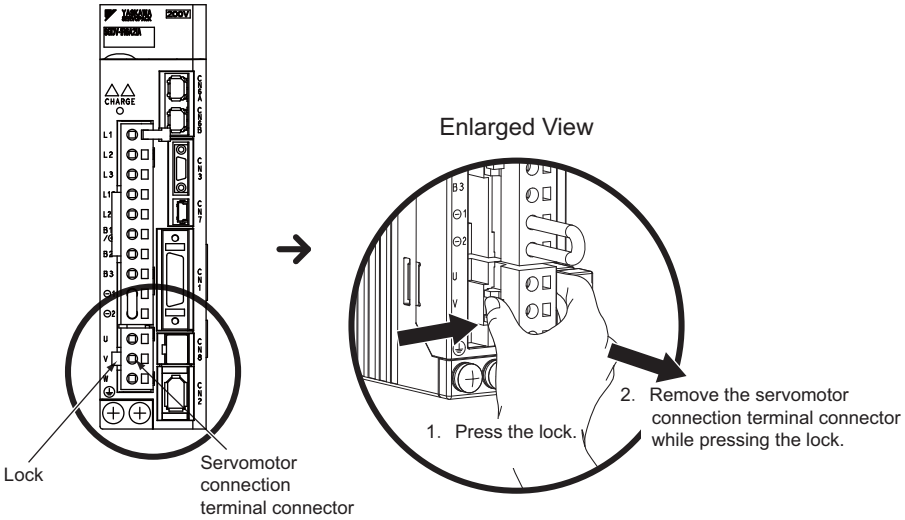

2. Slide the lock injector of the safety function's jumper connector to the SERVOPACK side to unlock and remove the safety function's jumper connector.

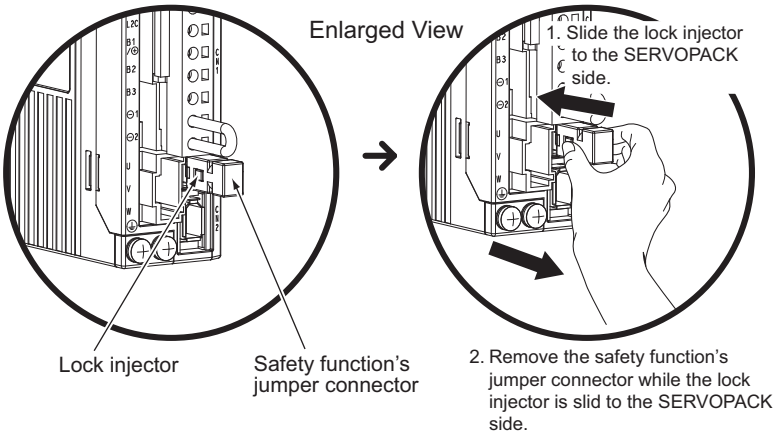

Note: The safety function's jumper connector may be damaged if removed while the lock is still on.

3. Connect the safety function device to the safety connector (CN8).

Note: If you do not connect a safety function device, leave the safety function's jumper connector connected to the safety connector (CN8). If the SERVOPACK is used without the safety function's jumper connector connected to CN8, no current will be supplied to the servomotor and no motor torque will be output. In this case, the SERVOPACK will enter a hard wire base block state.

(2) Connector Type B

1. Remove the safety function's jumper connector from the safety connector (CN8).

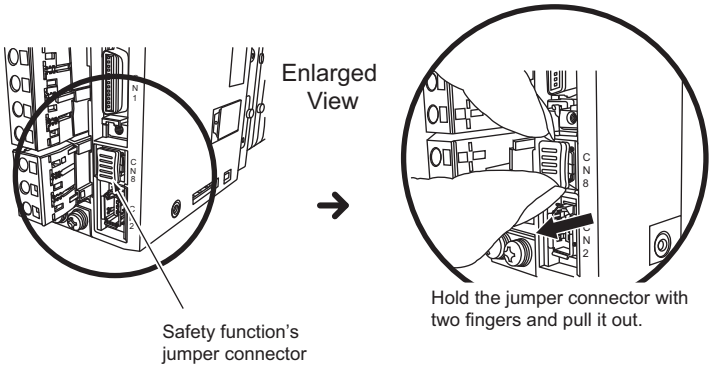

2. Connect the safety function device to the safety connector (CN8).

Note: If you do not connect a safety function device, leave the safety function's jumper connector connected to the safety connector (CN8). If the SERVOPACK is used without the safety function's jumper connector connected to CN8, no current will be supplied to the servomotor and no motor torque will be output. In this case, the SERVOPACK will enter a hard wire base block state.

4.9.6 Precautions for Safety Functions

⚠ WARNING

- To check that the HWBB function satisfies the safety requirements of the system, be sure to conduct a risk assessment of the system.
  Incorrect use of the machine may cause injury.
- The servomotor rotates if there is external force (e.g., gravity in a vertical axis) when the HWBB function is operating. Therefore, use an appropriate device independently, such as a mechanical brake, that satisfies safety requirements.
  Incorrect use of the machine may cause injury.
- While the HWBB function is operating, the motor may rotate within an electric angle of 180° or less as a result of a SERVOPACK failure. Use the HWBB function for applications only after checking that the rotation of the motor will not result in a dangerous condition.
  Incorrect use of the machine may cause injury.
- The dynamic brake and the brake signal are not safety-related parts of a control system. Be sure to design the system that these failures will not cause a dangerous condition when the HWBB function operates.
  Incorrect use of the machine may cause injury.
- Connect devices meeting safety standards for the signals for safety functions.
  Incorrect use of the machine may cause injury.
- If the HWBB function is used for an emergency stop, turn OFF the power supply to the servomotor with independent electric or mechanical parts.
  Incorrect use of the machine may cause injury.
- The HWBB function does not shut off the power to the SERVOPACK or electrically isolate it. Take measures to shut off the power to the SERVOPACK when performing maintenance on it.
  Failure to observe this warning may cause an electric shock.

5

Adjustments

5.1 Type of Adjustments and Basic Adjustment Procedure 5-3
5.1.1 Adjustments 5-3
5.1.2 Basic Adjustment Procedure 5-4
5.1.3 Monitoring Operation during Adjustment 5-5
5.1.4 Safety Precautions on Adjustment of Servo Gains 5-8

5.2 Tuning-less Function 5-11
5.2.1 Tuning-less Function 5-11
5.2.2 Tuning-less Levels Setting (Fn200) Procedure 5-14
5.2.3 Related Parameters 5-16

5.3 Advanced Autotuning (Fn201) 5-17
5.3.1 Advanced Autotuning 5-17
5.3.2 Advanced Autotuning Procedure 5-20
5.3.3 Related Parameters 5-26

5.4 Advanced Autotuning by Reference (Fn202) 5-27
5.4.1 Advanced Autotuning by Reference 5-27
5.4.2 Advanced Autotuning by Reference Procedure 5-29
5.4.3 Related Parameters 5-33

5.5 One-parameter Tuning (Fn203) 5-34
5.5.1 One-parameter Tuning 5-34
5.5.2 One-parameter Tuning Procedure 5-35
5.5.3 One-parameter Tuning Example 5-41
5.5.4 Related Parameters 5-42

5.6 Anti-Resonance Control Adjustment Function (Fn204) 5-43
5.6.1 Anti-Resonance Control Adjustment Function 5-43
5.6.2 Anti-Resonance Control Adjustment Function Operating Procedure 5-44
5.6.3 Related Parameters 5-48

5.7 Vibration Suppression Function (Fn205) 5-49
5.7.1 Vibration Suppression Function 5-49
5.7.2 Vibration Suppression Function Operating Procedure 5-50
5.7.3 Related Parameters 5-53

5.8 Additional Adjustment Function 5-54
5.8.1 Switching Gain Settings 5-54
5.8.2 Manual Adjustment of Friction Compensation 5-58
5.8.3 Current Control Mode Selection Function 5-60
5.8.4 Current Gain Level Setting 5-60
5.8.5 Speed Detection Method Selection 5-60
5.8.6 Backlash Compensation Function 5-61
5.9 Compatible Adjustment Function 5-67
5.9.1 Feedforward Reference 5-67
5.9.2 Mode Switch (P/PI Switching) 5-68
5.9.3 Torque Reference Filter 5-70
5.9.4 Position Integral 5-72

5.1 Type of Adjustments and Basic Adjustment Procedure

This section describes type of adjustments and the basic adjustment procedure.

5.1.1 Adjustments

Adjustments (tuning) are performed to optimize the responsiveness of the SERVOPACK.

The responsiveness is determined by the servo gain that is set in the SERVOPACK.

The servo gain is set using a combination of parameters, such as speed loop gain, position loop gain, filters, friction compensation, and moment of inertia ratio. These parameters influence each other. Therefore, the servo gain must be set considering the balance between the set values.

Generally, the responsiveness of a machine with high rigidity can be improved by increasing the servo gain. If the servo gain of a machine with low rigidity is increased, however, the machine will vibrate and the responsiveness may not be improved. In such case, it is possible to suppress the vibration with a variety of vibration suppression functions in the SERVOPACK.

The servo gains are factory-set to appropriate values for stable operation. The following utility function can be used to adjust the servo gain to increase the responsiveness of the machine in accordance with the actual conditions. With this function, parameters related to adjustment above will be adjusted automatically and the need to adjust them individually will be eliminated.

This section describes the following utility adjustment functions.

Utility Function for Adjustment	Outline	Applicable Control Method
Tuning-less Levels Setting (Fn200)	This function is enabled when the factory settings are used. This function can be used to obtain a stable response regardless of the type of machine or changes in the load.	Speed and Position
Advanced Autotuning (Fn201)	The following parameters are automatically adjusted using internal references in the SERVOPACK during automatic operation. • Moment of inertia ratio • Gains (position loop gain, speed loop gain, etc.) • Filters (torque reference filter, notch filter) • Friction compensation • Anti-resonance control adjustment function • Vibration suppression function	Speed and Position
Advanced Autotuning by Reference (Fn202)	The following parameters are automatically adjusted with the position reference input from the host controller while the machine is in operation. • Gains (position loop gain, speed loop gain, etc.) • Filters (torque reference filter, notch filter) • Friction compensation • Anti-resonance control adjustment function • Vibration suppression function	Position
One-parameter Tuning (Fn203)	The following parameters are manually adjusted with the position or speed reference input from the host controller while the machine is in operation. • Gains (position loop gain, speed loop gain, etc.) • Filters (torque reference filter, notch filter) • Friction compensation • Anti-resonance control adjustment function	Speed and Position
Anti-Resonance Control Adjustment Function (Fn204)	This function effectively suppresses continuous vibration.	Speed and Position
Vibration Suppression Function (Fn205)	This function effectively suppresses residual vibration if it occurs when positioning.	Position

5.1.2 Basic Adjustment Procedure

The basic adjustment procedure is shown in the following flowchart. Make suitable adjustments considering the conditions and operating requirements of the machine.

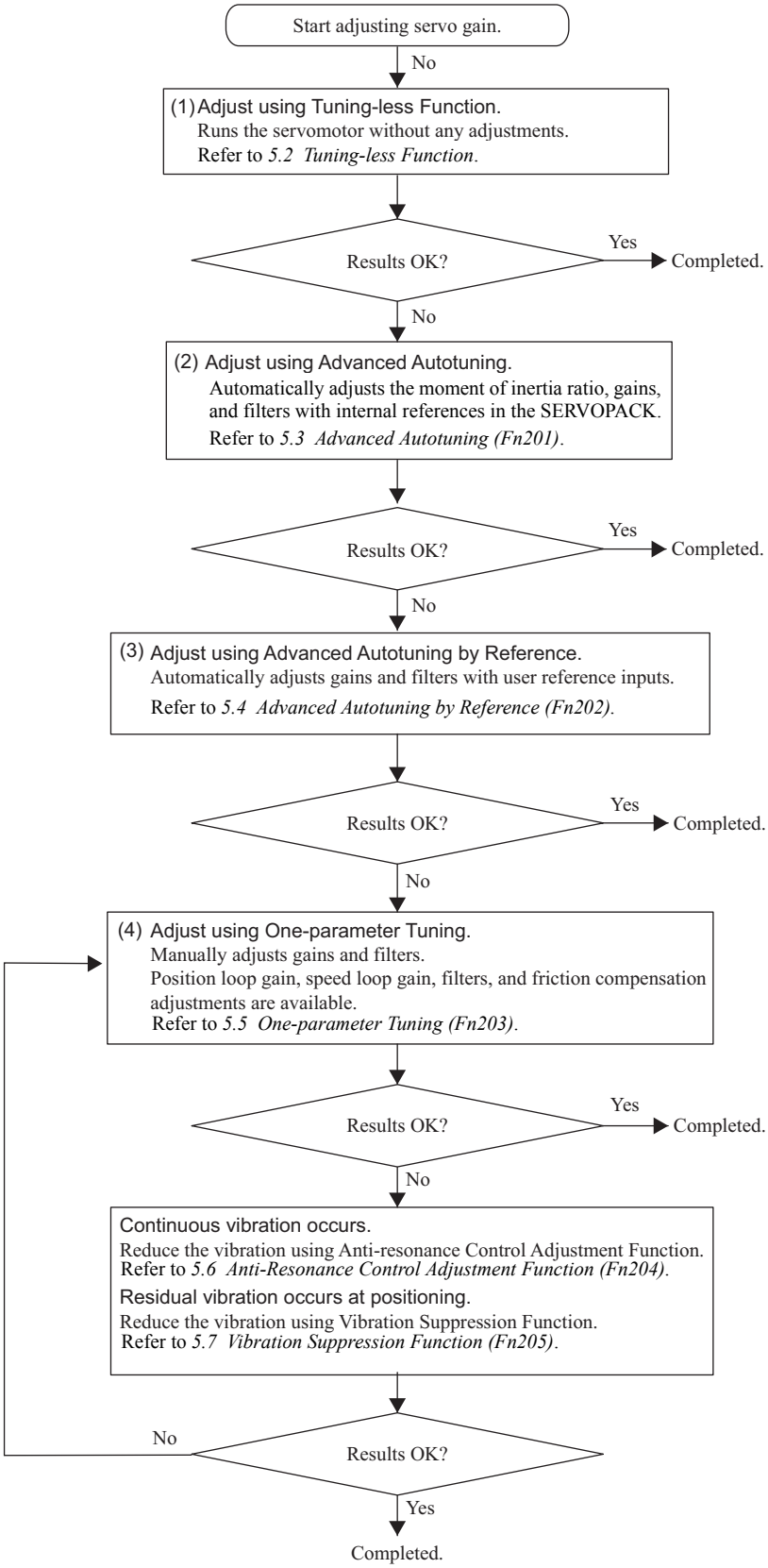

5.1.3 Monitoring Operation during Adjustment

Check the operating status of the machine and signal waveform when adjusting the servo gain. Connect a measuring instrument, such as a memory recorder, to connector CN5 analog monitor connector on the SERVOPACK to monitor analog signal waveform.

The settings and parameters for monitoring analog signals are described in the following sections.

(1) Connector CN5 for Analog Monitor

To monitor analog signals, connect a measuring instrument with cable (JZSP-CA01-E) to the connector CN5.

■ Connection Example

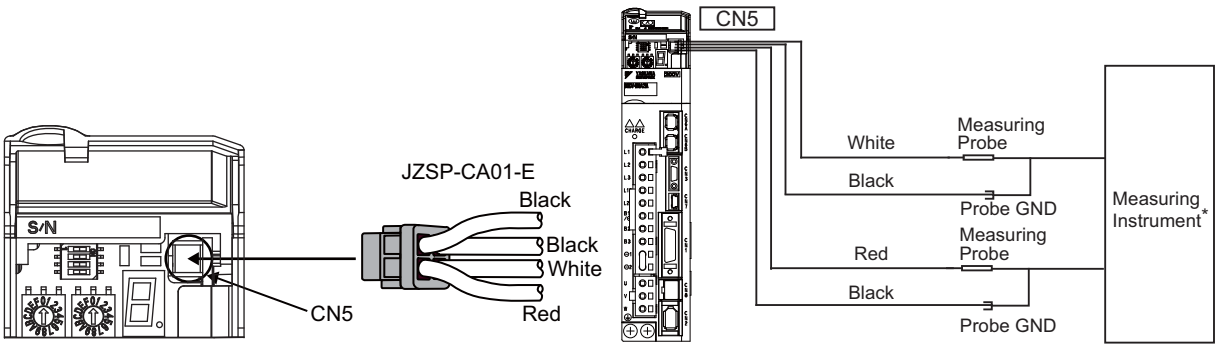

* Measuring instrument is not included.

Line Color	Signal Name	Factory Setting
White	Analog monitor 1	Torque reference: 1 V/100% rated torque
Red	Analog monitor 2	Motor speed: 1 V/1000 min^{-1}
Black (2 lines)	GND	Analog monitor GND: 0 V

(2) Monitor Signal

The shaded parts in the following diagram indicate analog output signals that can be monitored.

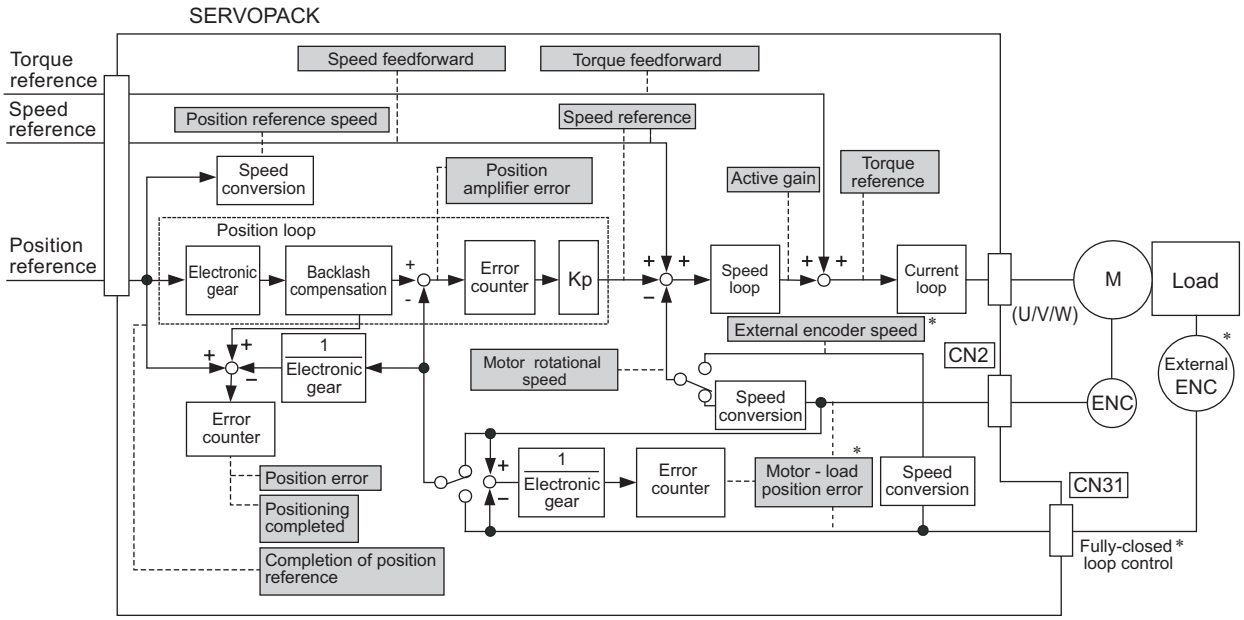

* Available when the fully-closed loop control is being used.

The following signals can be monitored by selecting functions with parameters Pn006 and Pn007.
Pn006 is used for analog monitor 1 and Pn007 is used for analog monitor 2.

Parameter		Description		
		Monitor Signal	Unit	Remarks
Pn006 Pn007	n.□□00 [Pn007 Factory Setting]	Motor rotating speed	1 V/1000 min^{-1}	–
	n.□□01	Speed reference	1 V/1000 min^{-1}	–
	n.□□02 [Pn006 Factory Setting]	Torque reference	1 V/100% rated torque	–
	n.□□03	Position error	0.05 V/1 reference unit	0 V at speed/torque control
	n.□□04	Position amplifier error	0.05 V/1 encoder pulse unit	Position error after electronic gear conversion
	n.□□05	Position reference speed	1 V/1000 min^{-1}	–
	n.□□06	Reserved (Do not change.)	–	–
	n.□□07	Motor-load position error	0.01 V/1 reference unit	–
	n.□□08	Positioning completed	Positioning completed: 5 V Positioning not completed: 0 V	Completion indicated by output voltage.
	n.□□09	Speed feedforward	1 V/1000 min^{-1}	–
	n.□□0A	Torque feedforward	1 V/100% rated torque	–
	n.□□0B	Active gain *	1st gain: 1 V 2nd gain: 2 V	Gain type indicated by output voltage.
	n.□□0C	Completion of position reference	Completed: 5 V Not completed: 0 V	Completion indicated by output voltage.
	n.□□0D	External encoder speed	1 V/1000 min^{-1}	Value at motor shaft

* Refer to *5.8.1 Switching Gain Settings* for details.

(3) Setting Monitor Factor

The output voltages on analog monitors 1 and 2 are calculated by the following equations.

$$\text{Analog monitor 1 output voltage} = (-1) \times \left(\underset{(\text{Pn006=n.00}\square\square)}{\text{Signal selection}} \times \underset{(\text{Pn552})}{\text{Multiplier}} + \underset{(\text{Pn550})}{\text{Offset voltage [V]}} \right)$$

$$\text{Analog monitor 2 output voltage} = (-1) \times \left(\underset{(\text{Pn007=n.00}\square\square)}{\text{Signal selection}} \times \underset{(\text{Pn553})}{\text{Multiplier}} + \underset{(\text{Pn551})}{\text{Offset voltage [V]}} \right)$$

<Example>

Analog monitor output at n.□□00 (motor rotating speed setting)

When multiplier is set to × 1:

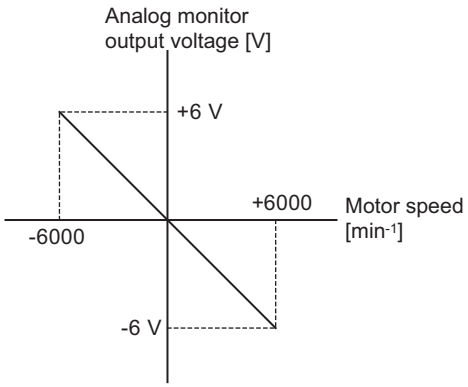

When multiplier is set to × 10:

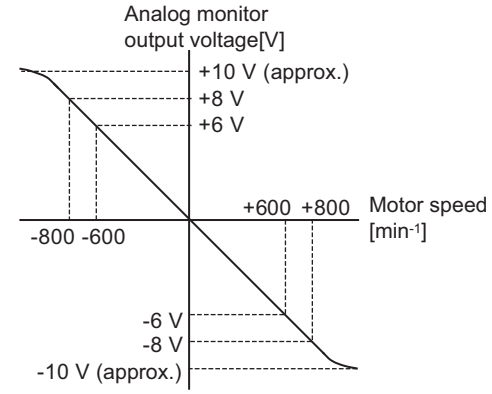

Note: Linear effective range: within ± 8 V
Output resolution: 16-bit

(4) Related Parameters

Use the following parameters to change the monitor factor and the offset.

Pn550	Analog Monitor 1 Offset Voltage		Speed Position Torque		Classification
	Setting Range	Setting Unit	Factory Setting	When Enabled	
	-10000 to 10000	0.1 V	0	Immediately	Setup
Pn551	Analog Monitor 2 Offset Voltage		Speed Position Torque		Classification
	Setting Range	Setting Unit	Factory Setting	When Enabled	
	-10000 to 10000	0.1 V	0	Immediately	Setup
Pn552	Analog Monitor Magnification (× 1)		Speed Position Torque		Classification
	Setting Range	Setting Unit	Factory Setting	When Enabled	
	-10000 to 10000	× 0.01	100	Immediately	Setup
Pn553	Analog Monitor Magnification (× 2)		Speed Position Torque		Classification
	Setting Range	Setting Unit	Factory Setting	When Enabled	
	-10000 to 10000	× 0.01	100	Immediately	Setup

5.1.4 Safety Precautions on Adjustment of Servo Gains

⚠ CAUTION

- If adjusting the servo gains, observe the following precautions.
  - Do not touch the rotating section of the servomotor while power is being supplied to the motor.
  - Before starting the servomotor, make sure that the SERVOPACK can come to an emergency stop at any time.
  - Make sure that a trial operation has been performed without any trouble.
  - Install a safety brake on the machine.

Set the following protective functions of the SERVOPACK to the correct settings before starting to adjust the servo gains.

(1) Overtravel Function

Set the overtravel function. For details on how to set the overtravel function, refer to *4.3.2 Overtravel*.

(2) Torque Limit

The torque limit calculates the torque required to operate the machine and sets the torque limits so that the output torque will not be greater than required. Setting torque limits can reduce the amount of shock applied to the machine when troubles occur, such as collisions or interference. If a torque limit is set lower than the value that is needed for operation, overshooting or vibration can be occurred.
For details, refer to *4.6 Limiting Torque*.

(3) Excessive Position Error Alarm Level

The excessive position error alarm is a protective function that will be enabled when the SERVOPACK is used in position control.

If this alarm level is set to a suitable value, the SERVOPACK will detect an excessive position error and will stop the servomotor if the servomotor does not operate according to the reference. The position error indicates the difference between the position reference value and the actual motor position.
The position error can be calculated from the position loop gain (Pn102) and the motor speed with the following equation.

$$\text{Position Error [reference unit]} = \frac{\text{Motor Speed [min}^{-1}\text{]}}{60} \times \frac{\text{Encoder Resolution}^{*1}}{\text{Pn102 [0.1/s]}/10^{*2}} \times \frac{\text{Pn210}}{\text{Pn20E}}$$

- Excessive Position Error Alarm Level (Pn520 [1 reference unit])

$$\text{Pn520} > \frac{\text{Max. Motor Speed [min}^{-1}\text{]}}{60} \times \frac{\text{Encoder Resolution}^{*1}}{\text{Pn102 [0.1/s]}/10^{*2}} \times \frac{\text{Pn210}}{\text{Pn20E}} \times \underline{\underline{(1.2 \text{ to } 2)}}$$

∗1. Refer to *4.4.3 Electronic Gear*.
∗2. To check the Pn102 setting, change the parameter display setting to display all parameters (Pn00B.0 = 1).

At the end of the equation, a coefficient is shown as "× (1.2 to 2)." This coefficient is used to add a margin that prevents a position error overflow alarm (A.d00) from occurring in actual operation of the servomotor.

Set the level to a value that satisfies these equations, and no position error overflow alarm (A.d00) will be generated during normal operation. The servomotor will be stopped, however, if it does not operate according to the reference and the SERVOPACK detects an excessive position error.

The following example outlines how the maximum limit for position deviation is calculated. These conditions apply.

- Maximum speed = 6000
- Encoder resolution = 1048576 (20 bits)
- Pn102 = 400
- $\frac{\text{Pn210}}{\text{Pn20E}} = \frac{1}{1}$

Under these conditions, the following equation is used to calculate the maximum limit (Pn520).

$$\text{Pn520} = \frac{6000}{60} \times \frac{1048576}{400/10} \times \frac{1}{1} \times 2$$

$$= 2621440 \times 2$$

$$= 5242880 \text{ (The factory setting of Pn520)}$$

If the acceleration/deceleration of the position reference exceeds the capacity of the servomotor, the servomotor cannot perform at the requested speed, and the allowable level for position error will be increased as not to satisfy these equations. If so, lower the level of the acceleration/deceleration for the position reference so that the servomotor can perform at the requested speed or increase the excessive position error alarm level (Pn520).

■ Related Parameter

Pn520	Excessive Position Error Alarm Level Position				Classification
	Setting Range	Setting Unit	Factory Setting	When Enabled	
	1 to 1073741823	1 reference unit	5242880	Immediately	Setup

■ Related Alarm

Alarm Display	Alarm Name	Meaning
A.d00	Position Error Overflow	Position errors exceeded parameter Pn520.

(4) Vibration Detection Function

Set the vibration detection function to an appropriate value with the vibration detection level initialization (Fn01B). For details on how to set the vibration detection function, refer to *6.16 Vibration Detection Level Initialization (Fn01B)*.

(5) Excessive Position Error Alarm Level at Servo ON

If position errors remain in the error counter when turning ON the servomotor power, the servomotor will move and this movement will clear the counter of all position errors. Because the servomotor will move suddenly and unexpectedly, safety precautions are required. To prevent the servomotor from moving suddenly, select the appropriate level for the excessive position error alarm level at servo ON (Pn526) to restrict operation of the servomotor.

■ Related Parameters

Pn526	Excessive Position Error Alarm Level at Servo ON Position				Classification
	Setting Range	Setting Unit	Factory Setting	When Enabled	
	1 to 1073741823	1 reference unit	5242880	Immediately	Setup

Pn528	Excessive Position Error Warning Level at Servo ON Position				Classification
	Setting Range	Setting Unit	Factory Setting	When Enabled	
	10 to 100	1%	100	Immediately	Setup

Pn529	Speed Limit Level at Servo ON Position				Classification
	Setting Range	Setting Unit	Factory Setting	When Enabled	
	0 to 10000	1 min^{-1}	10000	Immediately	Setup

■ Related Alarms

Alarm Display	Alarm Name	Meaning
A.d01	Position Error Overflow Alarm at Servo ON	This alarm occurs if the servomotor power is turned ON when the position error is greater than the set value of Pn526 while the servomotor power is OFF.
A.d02	Position Error Overflow Alarm by Speed Limit at Servo ON	When the position errors remain in the error counter, Pn529 limits the speed if the servomotor power is turned ON. If Pn529 limits the speed in such a state, this alarm occurs when position references are input and the number of position errors exceeds the value set for the excessive position error alarm level (Pn520).

When an alarm occurs, refer to *9 Troubleshooting* and take the corrective actions.

5.2 Tuning-less Function

The tuning-less function is enabled in the factory settings. If resonance is generated or excessive vibration occurs, refer to *5.2.2 Tuning-less Levels Setting (Fn200) Procedure* and change the set value of Pn170.2 for the rigidity level and the set value in Pn170.3 for the load level.

⚠ CAUTION

- The tuning-less function is enabled in the factory settings. A sound may be heard for a moment when the SV_ON command is received for the first time after the servo drive is mounted to the machine. This sound does not indicate any problems; it means that the automatic notch filter was set. The sound will not be heard from the next time the SV_ON command is received. For details on the automatic notch filter, refer to *(3) Automatically Setting the Notch Filter* on the next page.
- Set the mode to 2 in Fn200 if a 13-bit encoder is used with the moment of inertia ratio set to x10 or higher.
- The servomotor may vibrate if the load moment of inertia exceeds the allowable load value.
  If vibration occurs, set the mode to 2 in Fn200 or lower the adjustment level.

5.2.1 Tuning-less Function

The tuning-less function obtains a stable response without manual adjustment regardless of the type of machine or changes in the load.

(1) Enabling/Disabling Tuning-less Function

The following parameter is used to enable or disable the tuning-less function.

Parameter		Meaning	When Enabled	Classification
Pn170	n.□□□0	Disables tuning-less function.	After restart	Setup
	n.□□□1 [Factory setting]	Enables tuning-less function.		
	n.□□0□ [Factory setting]	Used as speed control.		
	n.□□1□	Used as speed control and host controller used as position control.		

(2) Application Restrictions

The tuning-less function can be used in position control or speed control. This function is not available in torque control. The following application restrictions apply to the tuning-less function.

Function	Availability	Remarks
Vibration detection level initialization (Fn01B)	Available	–
Advanced autotuning (Fn201)	Available (Some conditions apply)	• This function can be used when the moment of inertia is calculated. • While this function is being used, the tuning-less function cannot be used. After completion of the autotuning, it can be used again.
Advanced autotuning by reference (Fn202)	Not available	–
One-parameter tuning (Fn203)	Not available	–
Anti-resonance control adjustment function (Fn204)	Not available	–
Vibration suppression function (Fn205)	Not available	–
EasyFFT (Fn206)	Available	While this function is being used, the tuning-less function cannot be used. After completion of the EasyFFT, it can be used again.
Friction compensation	Not available	–
Gain switching	Not available	–

(cont'd)

Function	Availability	Remarks
Offline moment of inertia calculation *	Not available	Disable the tuning-less function by setting Pn170.0 to 0 before executing this function.
Mechanical analysis*	Available	While this function is being used, the tuning-less function cannot be used. After completion of the analysis, it can be used again.

* Operate using SigmaWin+.

(3) Automatically Setting the Notch Filter

Usually, set this function to Auto Setting. (The notch filter is factory-set to Auto Setting.)
If this function is set to Auto Setting, vibration will be detected automatically and the notch filter will be set when the tuning-less function is enabled.

Set this function to Not Auto Setting only if you do not change the notch filter setting before executing tuning-less function.

Parameter		Meaning	When Enabled	Classification
Pn460	n.□0□□	Does not set the 2nd notch filter automatically with utility function.	Immediately	Tuning
	n.□1□□ [Factory setting]	Set the 2nd notch filter automatically with utility function.		

(4) Tuning-less Level Settings

Two tuning-less levels are available: the rigidity level and load level. Both levels can be set in the Fn200 utility function or in the Pn170 parameter.

■ Rigidity Level

a) Using the utility function

To change the setting, refer to *5.2.2 Tuning-less Levels Setting (Fn200) Procedure*.

Digital Operator Display	Meaning
Level 0	Rigidity level 0
Level 1	Rigidity level 1
Level 2	Rigidity level 2
Level 3	Rigidity level 3
Level 4 [Factory setting]	Rigidity level 4

b) Using the parameter

Parameter		Meaning	When Enabled	Classification
Pn170	n.□0□□	Rigidity level 0 (Level 0)	Immediately	Setup
	n.□1□□	Rigidity level 1 (Level 1)		
	n.□2□□	Rigidity level 2 (Level 2)		
	n.□3□□	Rigidity level 3 (Level 3)		
	n.□4□□ [Factory setting]	Rigidity level 4 (Level 4)		

■ Load Level

a) Using the utility function

To change the setting, refer to *5.2.2 Tuning-less Levels Setting (Fn200) Procedure*.

Digital Operator Display	Meaning
Mode 0	Load level : Low
Mode 1 [Factory setting]	Load level : Medium
Mode 2	Load level : High

b) Using the parameter

Parameter		Meaning	When Enabled	Classification
Pn170	n.0□□□	Load level : Low (Mode 0)	Immediately	Setup
	n.1□□□ [Factory setting]	Load level : Medium (Mode 1)		
	n.2□□□	Load level : High (Mode 2)		

5.2.2 Tuning-less Levels Setting (Fn200) Procedure

⚠ CAUTION

- To ensure safety, perform the tuning-less function in a state where the SERVOPACK can come to an emergency stop at any time.

The procedure to use the tuning-less function is given below.

Operate the tuning-less function from the digital operator (option) or SigmaWin+.

For the basic operation of the digital operator, refer to *Σ-V Series User's Manual, Operation of Digital Operator* (No.: SIEP S800000 55).

(1) Preparation

Check the following settings before performing the tuning-less function. If the settings are not correct, "NO-OP" will be displayed during the tuning-less function.

- The tuning-less function must be enabled (Pn170.0 = 1).
- The write prohibited setting parameter (Fn010) must be set to Write permitted (P.0000).
- The test without a motor function must be disabled. (Pn00C.0 = 0).

(2) Operating Procedure with Digital Operator

Step	Display after Operation	Keys	Operation
1	RUN —FUNCTION— Fn080:Pole Detect Fn200:TuneLvl Set Fn201:AAT Fn202:Ref-AAT	MODE/SET ∧ ∨	Press the MODE/SET Key to view the main menu for the utility function. Use the ∧ or ∨ Key to move through the list, select Fn200.
2	RUN —TuneLvlSet— Mode=1	DATA	Press the DATA Key to display the load level of the tuning-less mode setting screen. Notes: • If the response waveform causes overshooting or if the load moment of inertia exceeds the allowable level (i.e., outside the scope of product guarantee), press the ∧ Key and change the mode setting to 2. • If a high-frequency noise is heard, press the ∨ Key and change the mode setting to 0.
3	RUN —TuneLvlSet— Level=4	DATA	Press the DATA Key to display the rigidity level of the tuning-less mode setting screen.
4	RUN —TuneLvlSet— Level=4 NF2 2nd notch filter	∧ ∨ JOG SVON	Press the ∧ Key or the ∨ Key to select the rigidity level. Select the rigidity level from 0 to 4. The larger the value, the higher the gain is and the better response performance will be. (The factory setting is 4.) Notes: • Vibration may occur if the rigidity level is too high. Lower the rigidity level if vibration occurs. • If a high-frequency noise is heard, press the JOG SVON Key to automatically set a notch filter to the vibration frequency.
5	RUN —TuneLvlSet— Level=4	DATA	Press the DATA Key. "DONE" will flash for approximately two seconds and then "RUN" will be displayed. The settings are saved in the SERVOPACK.

(cont'd)

Step	Display after Operation	Keys	Operation
6	RUN —FUNCTION— Fn030 Fn200 Fn201 Fn202	MODE/SET	Press the MODE/SET Key to complete the tuning-less function. The screen in step 1 will appear again.

Note: If the rigidity level is changed, the automatically set notch filter will be canceled. If vibration occurs, however, the notch filter will be set again automatically.

(3) Alarm and Corrective Actions

The autotuning alarm (A.521) will occur if resonance sound is generated or excessive vibration occurs during position control. In such case, take the following actions.

■ Resonance Sound

Reduce the setting of the rigidity level or load level.

■ Excessive Vibration during Position Control

Take one of the following actions to correct the problem.

- Increase the setting of the rigidity level or reduce the load level.
- Increase the setting of Pn170.3 or reduce the setting of Pn170.2.

(4) Parameters Disabled by Tuning-less Function

When the tuning-less function is enabled in the factory settings, the settings of these parameters are not available: Pn100, Pn101, Pn102, Pn103, Pn104, Pn105, Pn106, Pn160, Pn139, and Pn408. These gain-related parameters, however, may become effective depending on the executing conditions of the functions specified in the following table. For example, if EasyFFT is executed when the tuning-less function is enabled, the settings in Pn100, Pn104, Pn101, Pn105, Pn102, Pn106, and Pn103, as well as the manual gain switch setting, will be enabled, but the settings in Pn408.3, Pn160.0, and Pn139.0 will be not enabled.

Parameters Disabled by Tuning-less Function			Related Functions and Parameters*		
Item	Name	Pn Number	Torque Control	Easy FFT	Mechanical Analysis (Vertical Axis Mode)
Gain	Speed Loop Gain 2nd Speed Loop Gain	Pn100 Pn104	○	○	○
	Speed Loop Integral Time Constant 2nd Speed Loop Integral Time Constant	Pn101 Pn105	×	○	○
	Position Loop Gain 2nd Position Loop Gain	Pn102 Pn106	×	○	○
	Moment of Inertia Ratio	Pn103	○	○	○
Advanced Control	Friction Compensation Function Selection	Pn408.3	×	×	×
	Anti-resonance Control Adjustment Selection	Pn160.0	×	×	×
Gain Switching	Gain Switching Selection Switch	Pn139.0	×	×	×

* ○: Parameter enabled
×: Parameter disabled

(5) Tuning-less Function Type

The following table shows the types of tuning-less functions for the version of SERVOPACK software.

Software Version*	Tuning-less Type	Meaning
000A or earlier	Tuning-less type 1	–
000B or later	Tuning-less type 2	The level of noise produced is lower than that of Type 1.

* The software version number of your SERVOPACK can be checked with Fn012.

Parameter		Meaning	When Enabled	Classification
Pn14F	n.□□0□	Tuning-less type 1	After restart	Tuning
	n.□□1□ [Factory setting]	Tuning-less type 2		

5.2.3 Related Parameters

The following table lists parameters related to this function and their possibility of being changed while executing this function or of being changed automatically after executing this function.

• Parameters related to this function
These are parameters that are used or referenced when executing this function.

• Allowed changes during execution of this function
Yes : Parameters can be changed using SigmaWin+ while this function is being executed.
No : Parameters cannot be changed using SigmaWin+ while this function is being executed.

• Automatic changes after execution of this function
Yes : Parameter set values are automatically set or adjusted after execution of this function.
No : Parameter set values are not automatically set or adjusted after execution of this function.

Parameter	Name	Mid-execution changes	Automatic changes
Pn170	Tuning-less Function Related Switch	No	Yes
Pn401	Torque Reference Filter Time Constant	No	Yes
Pn40C	2nd Notch Filter Frequency	No	Yes
Pn40D	2nd Notch Filter Q Value	No	Yes

5.3 Advanced Autotuning (Fn201)

This section describes the adjustment using advanced autotuning.

IMPORTANT

- Advanced autotuning starts adjustments based on the set speed loop gain (Pn100). Therefore, precise adjustments cannot be made if there is vibration when starting adjustments. In this case, make adjustments after lowering the speed loop gain (Pn100) until vibration is eliminated.
- Before performing advanced autotuning with the tuning-less function enabled (Pn170.0 = 1: Factory setting), always set Jcalc to ON to calculate the load moment of inertia. The tuning-less function will automatically be disabled, and the gain will be set by advanced autotuning.
  With Jcalc set to OFF so the load moment of inertia is not calculated, "Error" will be displayed on the panel operator, and advanced autotuning will not be performed.
- If the operating conditions, such as the machine-load or drive system, are changed after advanced autotuning, then change the following related parameters to disable any values that were adjusted before performing advanced autotuning once again with the setting to calculate the moment of inertia (Jcalc = ON). If advanced autotuning is performed without changing the parameters, machine vibration may occur, resulting in damage to the machine.
  Pn00B.0=1 (Displays all parameters.)
  Pn140.0=0 (Does not use model following control.)
  Pn160.0=0 (Does not use anti-resonance control.)
  Pn408=n.00□0 (Does not use friction compensation, 1st notch filter, or 2nd notch filter.)

5.3.1 Advanced Autotuning

Advanced autotuning automatically operates the servo system (in reciprocating movement in the forward and reverse directions) within set limits and adjust the SERVOPACK automatically according to the mechanical characteristics while the servo system is operating.

Advanced autotuning can be performed without connecting the host controller.
The following automatic operation specifications apply.

- Maximum speed: Rated motor speed × 2/3
- Acceleration torque: Approximately 100% of rated motor torque
  The acceleration torque varies with the influence of the moment of inertia ratio (Pn103), machine friction, and external disturbance.
- Travel distance: The travel distance can be set freely. The distance is factory-set to a value equivalent to 3 motor rotations.
  For an SGMCS direct drive servomotor, the distance is factory-set to a value equivalent to 0.3 motor rotations.

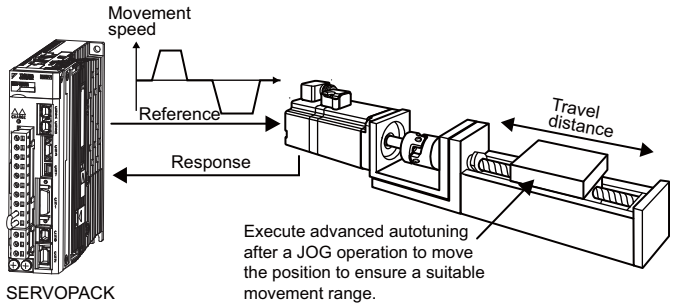

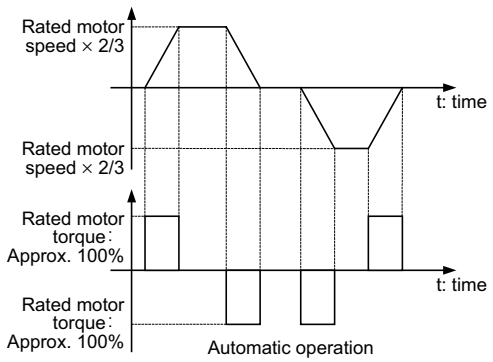

Advanced autotuning performs the following adjustments.

- Moment of inertia ratio
- Gains (e.g., position loop gain and speed loop gain)
- Filters (torque reference filter and notch filter)
- Friction compensation
- Anti-resonance control
- Vibration suppression (Mode = 2 or 3)

Refer to *5.3.3 Related Parameters* for parameters used for adjustments.

⚠ CAUTION

- Because advanced autotuning adjusts the SERVOPACK during automatic operation, vibration or over-shooting may occur. To ensure safety, perform advanced autotuning in a state where the SERVOPACK can come to an emergency stop at any time.

(1) Preparation

Check the following settings before performing advanced autotuning.
The message "NO-OP" indicating that the settings are not appropriate will be displayed, if all of the following conditions are not met.

- The main circuit power supply must be ON.
- There must be no overtravel.
- The servomotor power must be OFF.
- The control method must not be set to torque control.
- The gain selection switch must be in manual switching mode (Pn139.0 = 0).
- Gain setting 1 must be selected.
- The test without a motor function must be disabled (Pn00C.0 = 0).
- All alarms and warning must be cleared.
- The hardwire baseblock (HWBB) must be disabled.
- The write prohibited setting parameter (Fn010) must be set to Write permitted (P.0000).
- Jcalc must be set to ON to calculate the load moment of inertia when the tuning-less function is enabled (Pn170.0 = 1: factory setting) or the tuning-less function must be disabled (Pn170.0 = 0).

Note:
- If advanced autotuning is started while the SERVOPACK is in speed control, the mode will change to position control automatically to perform advanced autotuning. The mode will return to speed control after completing the adjustment. To perform advanced autotuning in speed control, set the mode to 1 (Mode = 1).

(2) When Advanced Autotuning Cannot Be Performed

Advanced autotuning cannot be performed normally under the following conditions. Refer to *5.4 Advanced Autotuning by Reference (Fn202)* and *5.5 One-parameter Tuning (Fn203)* for details.

- The machine system can work only in a single direction.
- The operating range is within 0.5 rotation. (Also for SGMCS direct drive motors, the operating range is within 0.05 rotation.)

(3) When Advanced Autotuning Cannot Be Performed Successfully

Advanced autotuning cannot be performed successfully under the following conditions. Refer to *5.4 Advanced Autotuning by Reference (Fn202)* and *5.5 One-parameter Tuning (Fn203)* for details.

- The operating range is not applicable.
- The moment of inertia changes within the set operating range.
- The machine has high friction.
- The rigidity of the machine is low and vibration occurs when positioning is performed.
- The position integration function is used.
- P control operation (proportional control) is used.

Note:If a setting is made for calculating the moment of inertia, an error will result when P control operation is selected using /V_PPI of the servo command output signals (SVCMD_IO) while the moment of inertia is being calculated.

- The mode switch is used.

Note: If a setting is made for calculating the moment of inertia, the mode switch function will be disabled while the moment of inertia is being calculated. At that time, PI control will be used. The mode switch function will be enabled after calculating the moment of inertia.

- Speed feedforward or torque feedforward is input.
- The positioning completed width (Pn522) is too small.

IMPORTANT

- Advanced autotuning makes adjustments by referring to the positioning completed width (Pn522). If the SERVOPACK is operated in position control (Pn000.1=1), set the electronic gear ratio (Pn20E/Pn210) and positioning completed width (Pn522) to the actual value during operation. If the SERVOPACK is operated in speed control (Pn000.1=0), set Mode to 1 to perform advanced autotuning.
- Unless the positioning completed signal (/COIN) is turned ON within approximately 3 seconds after positioning has been completed, "WAITING" will flash. Furthermore, unless the positioning completed signal (/COIN) is turned ON within approximately 10 seconds, "Error" will flash for 2 seconds and tuning will be aborted.

Change only the overshoot detection level (Pn561) to finely adjust the amount of overshooting without changing the positioning completed width (Pn522). Because Pn561 is set by default to 100%, the allowable amount of overshooting is the same amount as that for the positioning completed width.
When Pn561 is set to 0%, the amount of overshooting can be adjusted to prevent overshooting the positioning completed width. If the setting of Pn561 is changed, however, the positioning time may be extended.

Pn561	Overshoot Detection Level		Speed Position Torque		Classification
	Setting Range	Setting Unit	Factory Setting	When Enabled	
	0 to 100	1%	100	Immediately	Setup

(4) Application Restrictions by Encoder Resolution

■ When Using a 13-bit Encoder

Applicable servomotor : SGMJV-□□□A□□□

Mode selection: Fixed to Mode 1 (Mode = 1) and cannot be changed.

5.3.2 Advanced Autotuning Procedure

The following procedure is used for advanced autotuning.

Advanced autotuning is performed from the digital operator (option) or SigmaWin+.

The operating procedure from the digital operator is described here.

Refer to the *Σ-V Series User's Manual, Operation of Digital Operator* (No.: SIEP S800000 55) for basic key operations of the digital operator.

⚠ CAUTION

- When using the SERVOPACK with Jcalc = OFF (load moment of inertia is not calculated), be sure to set a suitable value for the moment of inertia ratio (Pn103). If the setting greatly differs from the actual moment of inertia ratio, normal control of the SERVOPACK may not be possible, and vibration may result.
- When using the MP2000 Series with phase control, select the mode = 1 (standard level). If 2 or 3 is selected, phase control of the MP2000 Series may not be possible.

(1) Operating Procedure

Step	Display after Operation	Keys	Operation
1	BB —FUNCTION— Fn200:TuneLvl Set Fn201:AAT Fn202:Ref-AAT Fn203:OnePrmTun	MODE/SET ∧ ∨	Press the MODE/SET Key to view the main menu for the utility function. Use the ∧ or ∨ Key to move through the list, select Fn201.
2	Status Display BB Advanced AT Jcalc=ON Mode=2 Type=2 Stroke=+00800000 (0003.0)rev	DATA	Press the DATA Key to display the initial setting screen for advanced autotuning.
3	BB Advanced AT Jcalc=ON Mode=2 Type=2 Stroke=+00800000 (0003.0)rev	∧ ∨ SCROLL	Press the ∧, ∨, or SCROLL Key and set the items in steps 3-1 to 3-4.
3-1	■Calculating Moment of Inertia Select the mode to be used. Usually, set Jcalc to ON. Jcalc = ON: Moment of inertia calculated [Factory setting] Jcalc = OFF: Moment of inertia not calculated Note: If the moment of inertia ratio is already known from the machine specifications, set the value in Pn103 and set Jcalc to OFF.		
3-2	■Mode Selection Select the mode. Mode = 1: Makes adjustments considering response characteristics and stability (Standard level). Mode = 2: Makes adjustments for positioning [Factory setting]. Mode = 3: Makes adjustments for positioning, giving priority to overshooting suppression.		
3-3	■Type Selection Select the type according to the machine element to be driven. If there is noise or the gain does not increase, better results may be obtained by changing the rigidity type. Type = 1: For belt drive mechanisms Type = 2: For ball screw drive mechanisms [Factory setting] Type = 3: For rigid systems in which the servomotor is directly coupled to the machine (without gear or other transmissions)		

(cont'd)

Step	Display after Operation	Keys	Operation
3-4	■STROKE (Travel Distance) Setting Travel distance setting range: The travel distance setting range is from -99990000 to +99990000 [reference unit]. Specify the STROKE (travel distance) in increments of 1000 reference units. The negative (-) direction is for reverse rotation, and the positive (+) direction is for forward rotation. Initial value: About 3 rotations Notes: • Set the number of motor rotations to at least 0.5; otherwise, "Error" will be displayed and the travel distance cannot be set. • To calculate the moment of inertia and ensure precise tuning, it is recommended to set the number of motor rotations to around 3. • For an SGMCS direct drive servomotor, the factory setting for distance is set to a value that is equivalent to 0.3 motor rotations.		
4	BB Advanced AT Pn103=00100 Pn100=0040.0 Pn101=0020.00 Pn102=0040.0	DATA	Press the DATA Key. The advanced autotuning execution screen will be displayed.
5	RUN Advanced AT Pn103=00100 Pn100=0040.0 Pn101=0020.00 Pn141=0050.0	JOG SVON	Press the JOG SVON Key. The servomotor power will be ON and the display will change from "BB" to "RUN." Note: If the mode is set to 1, Pn102 is displayed. If the mode is set to 2 or 3, the Pn102 display will change to the Pn141.
6	ADJ Advanced AT Pn103=00300 Pn100=0040.0 Pn101=0020.0 Pn141=0050.0 Display example: After the moment of inertia is calculated.	∧ ∨	Calculates the moment of inertia. Press the ∧ Key if a positive (+) value is set in STROKE (travel distance), or press the ∨ Key if a negative (-) value is set. Calculation of the moment of inertia will start. While the moment of inertia is being calculated, the set value for Pn103 will flash and "ADJ" will flash instead of "RUN." When calculating the moment of inertia is completed, the display will stop flashing and the moment of inertia is displayed. The servomotor will remain ON, but the auto run operation will be stopped temporarily. Notes: • The wrong key for the set travel direction is pressed, the calculation will not start. • If the moment of inertia is not calculated (Jcalc = OFF), the set value for Pn103 will be displayed. • If "NO-OP" or "Error" is displayed during operation, press the MODE/SET Key to cancel the function. Refer to *(2) Failure in Operation* and take a corrective action to enable operation.
7		DATA MODE/SET	After the servomotor is temporarily stopped, press the DATA Key to save the calculated moment of inertia ratio in the SERVOPACK. "DONE" will flash for one second, and "ADJ" will be displayed again. Note: To end operation by calculating only the moment of inertia ratio and without adjusting the gain, press the MODE/SET Key to end operation.

(cont'd)

Step	Display after Operation	Keys	Operation
8	ADJ Advanced AT Pn103=00300 Pn100=0100.0 Pn101=0006.36 Pn141=0150.0	∧ ∨	■Gain Adjustment When the ∧ or ∨ Key is pressed according to the sign (+ or -) of the value set for stroke (travel distance), the calculated value of the moment of inertia ratio will be saved in the SERVOPACK and the auto run operation will restart. While the servomotor is running, the filters, and gains will be automatically set. "ADJ" will flash during the auto setting operation. Note: Precise adjustments cannot be made and "Error" will be displayed as the status if there is machine resonance when starting adjustments. If that occurs, make adjustments using one-parameter tuning (Fn203).
9	ADJ Advanced AT Pn103=00300 Pn100=0100.0 Pn101=0006.36 Pn141=0150.0		When the adjustment has been completed normally, the servomotor power will turn OFF, and "END" will flash for approximately two seconds and then "ADJ" will be displayed on the status display.
10	BB Advanced AT Pn103=00300 Pn100=0100.0 Pn101=0006.36 Pn141=0150.0	DATA	Press the DATA Key. The adjusted values will be saved in the SERVOPACK. "DONE" will flash for approximately two seconds, and "BB" will be displayed. Note: Press the MODE/SET Key to not save the values. The display will return to that shown in step 1.
11	Turn ON the SERVOPACK power supply again after executing advanced autotuning.		

(2) Failure in Operation

■ When "NO-OP" Flashes on the Display

Probable Cause	Corrective Actions
The main circuit power supply was OFF.	Turn ON the main circuit power supply.
An alarm or warning occurred.	Remove the cause of the alarm or the warning.
Overtraveling occurred.	Remove the cause of the overtravel.
Gain setting 2 was selected by gain switching.	Disable the automatic gain switching.
The HWBB function operated.	Disable the HWBB function.

■ When "Error" Flashes on the Display

Error	Probable Cause	Corrective Actions
The gain adjustment was not successfully completed.	Machine vibration is occurring or the positioning completed signal (/COIN) is turning ON and OFF when the servomotor is stopped.	• Increase the set value for Pn522. • Change the mode from 2 to 3. • If machine vibration occurs, suppress the vibration with the anti-resonance control adjustment function and the vibration suppression function.
An error occurred during the calculation of the moment of inertia.	Refer to the following table ■ *When an Error Occurs during Calculation of Moment of Inertia*.	
Travel distance setting error	The travel distance is set to approximately 0.5 rotation (0.05 rotation for SGMCS servomotor) or less, which is less than the minimum adjustable travel distance.	Increase the travel distance. It is recommended to set the number of motor rotations to around 3.
The positioning completed signal (/COIN) did not turn ON within approximately 10 seconds after positioning adjustment was completed.	The positioning completed width is too narrow or proportional control (P control) is being used.	• Increase the set value for Pn522. • Set 0 to V_PPI in the servo command output signals (SVCMD_IO).
The moment of inertia cannot be calculated when the tuning-less function was activated.	When the tuning-less function was activated, Jcalc was set to OFF so the moment of inertia was not calculated.	• Turn OFF the tuning-less function. • Set Jcalc to ON, so the moment of inertia will be calculated.

■ When an Error Occurs during Calculation of Moment of Inertia

The following table shows the probable causes of errors that may occur during the calculation of the moment of inertia with the Jcalc set to ON, along with corrective actions for the errors.

Error Display	Probable Cause	Corrective Actions
Err1	The SERVOPACK started calculating the moment of inertia, but the calculation was not completed.	• Increase the speed loop gain (Pn100). • Increase the STROKE (travel distance).
Err2	The moment of inertia fluctuated greatly and did not converge within 10 tries.	Set the calculation value based on the machine specifications in Pn103 and execute the calculation with the Jcalc set to OFF.
Err3	Low-frequency vibration was detected.	Double the set value of the moment of inertia calculating start level (Pn324).
Err4	The torque limit was reached.	• When using the torque limit, increase the torque limit. • Double the set value of the moment of inertia calculating start level (Pn324).
Err5	While calculating the moment of inertia, the speed control was set to proportional control by setting 1 to V_PPI in the servo command output signals (SVCMD_IO).	Operate the SERVOPACK with PI control while calculating the moment of inertia.

(3) Related Functions on Advanced Autotuning

This section describes functions related to advanced tuning.

■ Notch Filter

Usually, set this function to Auto Setting. (The notch filter is factory-set to Auto Setting.)
If this function is set to Auto Setting, vibration will be detected automatically during advanced autotuning and the notch filter will be set.

Set this function to Not Auto Setting only if you do not change the notch filter setting before executing advanced autotuning.

Parameter		Function	When Enabled	Classification
Pn460	n.□□□0	Does not set the 1st notch filter automatically with the utility function.	Immediately	Tuning
	n.□□□1 [Factory setting]	Sets the 1st notch filter automatically with the utility function.		
	n.□0□□	Does not set the 2nd notch filter automatically with the utility function.		
	n.□1□□ [Factory setting]	Sets the 2nd notch filter automatically with the utility function.		

■ Anti-Resonance Control Adjustment

This function reduces low vibration frequency, which the notch filter does not detect.

Usually, set this function to Auto Setting. (The anti-resonance control is factory-set to Auto Setting.)
When this function is set to Auto Setting, vibration will be automatically detected during advanced autotuning and anti-resonance control will be automatically adjusted and set.

Parameter		Function	When Enabled	Classification
Pn160	n.□□0□	Does not use the anti-resonance control automatically with the utility function.	Immediately	Tuning
	n.□□1□ [Factory setting]	Uses the anti-resonance control automatically with the utility function.		

■ Vibration Suppression

The vibration suppression function suppresses transitional vibration at frequency as low as 1 to 100 Hz that is generated mainly when positioning if the machine stand vibrates.

Usually, set this function to Auto Setting. (The vibration suppression function is factory-set to Auto Setting.)
When this function is set to Auto Setting, vibration will be automatically detected during advanced autotuning and vibration suppression will be automatically adjusted and set.
Set this function to Not Auto Setting only if you do not change the setting for vibration suppression before executing advanced autotuning.

Note: This function uses model following control. Therefore, the function can be executed only if the mode is set to 2 or 3.

- Related Parameter

Parameter		Function	When Enabled	Classification
Pn140	n.□0□□	Does not use the vibration suppression function automatically with the utility function.	Immediately	Tuning
	n.□1□□ [Factory setting]	Uses the vibration suppression function automatically with the utility function.		

■ Friction Compensation

This function compensates for changes in the following conditions.

- Changes in the viscous resistance of the lubricant, such as the grease, on the sliding parts of the machine
- Changes in the friction resistance resulting from variations in the machine assembly
- Changes in the friction resistance due to aging

The conditions for applying friction compensation depend on the mode. The friction compensation setting in Pn408.3 applies when the Mode is 1. The friction compensation function is always enabled regardless of the friction compensation setting in Pn408.3 when the Mode is 2 or 3.

Friction Compensation Selecting \ Mode		Mode = 1	Mode = 2	Mode = 3
Pn408	n.0□□□ [Factory setting]	Adjusted without the friction compensation function	Adjusted with the friction compensation function	Adjusted with the friction compensation function
	n.1□□□	Adjusted with the friction compensation function		

■ Feedforward

If Pn140 is set to the factory setting and the mode setting is changed to 2 or 3, the feedforward gain (Pn109), speed feedforward (VFF) input, and torque feedforward (TFF) input will be disabled.

Set Pn140.3 to 1 if model following control is used together with the speed feedforward (VFF) input and torque feedforward (TFF) input from the host controller.

Parameter		Function	When Enabled	Classification
Pn140	n.0□□□ [Factory setting]	Model following control is not used together with the speed/torque feedforward input.	Immediately	Tuning
	n.1□□□	Model following control is used together with the speed/torque feedforward input.		

Refer to *Σ-V Series User's Manual MECHATROLINK-III Standard Servo Profile Commands* (No.: SIEP S800000 63) for details.

IMPORTANT

- Model following control is used to make optimum feedforward settings in the SERVOPACK when model following control is used with the feedforward function. Therefore, model following control is not normally used together with either the speed feedforward (VFF) input or torque feedforward (TFF) input from the host controller. However, model following control can be used with the speed feedforward (VFF) input or torque feedforward (TFF) input if required. An improper feedforward input may result in overshooting.

5.3.3 Related Parameters

The following table lists parameters related to this function and their possibility of being changed while executing this function or of being changed automatically after executing this function.

- Parameters related to this function
  These are parameters that are used or referenced when executing this function.

- Allowed changes during execution of this function
  Yes : Parameters can be changed using SigmaWin+ while this function is being executed.
  No : Parameters cannot be changed using SigmaWin+ while this function is being executed.

- Automatic changes after execution of this function
  Yes : Parameter set values are automatically set or adjusted after execution of this function.
  No : Parameter set values are not automatically set or adjusted after execution of this function.

Parameter	Name	Mid-execution changes	Automatic changes
Pn100	Speed Loop Gain	No	Yes
Pn101	Speed Loop Integral Time Constant	No	Yes
Pn102	Position Loop Gain	No	Yes
Pn103	Moment of Inertia Ratio	No	No
Pn121	Friction Compensation Gain	No	Yes
Pn123	Friction Compensation Coefficient	No	Yes
Pn124	Friction Compensation Frequency Correction	No	No
Pn125	Friction Compensation Gain Correction	No	Yes
Pn401	Torque Reference Filter Time Constant	No	Yes
Pn408	Torque Related Function Switch	Yes	Yes
Pn409	1st Notch Filter Frequency	No	Yes
Pn40A	1st Notch Filter Q Value	No	Yes
Pn40C	2nd Notch Filter Frequency	No	Yes
Pn40D	2nd Notch Filter Q Value	No	Yes
Pn140	Model Following Control Related Switch	Yes	Yes
Pn141	Model Following Control Gain	No	Yes
Pn142	Model Following Control Gain Compensation	No	Yes
Pn143	Model Following Control Bias (Forward Direction)	No	Yes
Pn144	Model Following Control Bias (Reverse Direction)	No	Yes
Pn145	Vibration Suppression 1 Frequency A	No	Yes
Pn146	Vibration Suppression 1 Frequency B	No	Yes
Pn147	Model Following Control Speed Feedforward Compensation	No	Yes
Pn160	Anti-Resonance Control Related Switch	Yes	Yes
Pn161	Anti-Resonance Frequency	No	Yes
Pn163	Anti-Resonance Damping Gain	No	Yes
Pn531	Program JOG Movement Distance	No	No
Pn533	Program JOG Movement Speed	No	No
Pn534	Program JOG Acceleration/Deceleration Time	No	No
Pn535	Program JOG Waiting Time	No	No
Pn536	Number of Times of Program JOG Movement	No	No

5.4 Advanced Autotuning by Reference (Fn202)

Adjustments with advanced autotuning by reference are described below.

IMPORTANT	Advanced autotuning by reference starts adjustments based on the set speed loop gain (Pn100). Therefore, precise adjustments cannot be made if there is vibration when starting adjustments. In this case, make adjustments after lowering the speed loop gain (Pn100) until vibration is eliminated.

5.4.1 Advanced Autotuning by Reference

Advanced autotuning by reference is used to automatically achieve optimum tuning of the SERVOPACK in response to the user reference inputs from the host controller.

Advanced autotuning by reference is performed generally to fine-tune the SERVOPACK after advanced autotuning of the SERVOPACK has been performed.

If the moment of inertia ratio is correctly set to Pn103, advanced autotuning by reference can be performed without performing advanced autotuning.

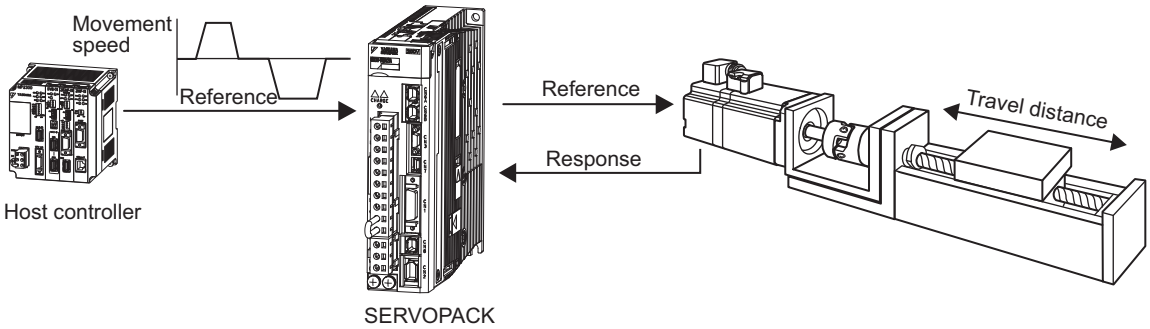

Advanced autotuning by reference performs the following adjustments.

- Gains (e.g., position loop gain and speed loop gain)
- Filters (torque reference filter and notch filter)
- Friction compensation
- Anti-resonance control
- Vibration suppression

Refer to *5.4.3 Related Parameters* for parameters used for adjustments.

⚠ CAUTION

- Because advanced autotuning by reference adjusts the SERVOPACK during automatic operation, vibration or overshooting may occur. To ensure safety, perform advanced autotuning by reference in a state where the SERVOPACK can come to an emergency stop at any time.

(1) Preparation

Check the following settings before performing advanced autotuning by reference. The message “NO-OP” indicating that the settings are not appropriate will be displayed, if all of the following conditions are not met.

- The SERVOPACK must be in Servo Ready status (Refer to *4.8.4*).
- There must be no overtravel.
- The servomotor power must be OFF.
- The position control must be selected when the servomotor power is ON.
- The gain selection switch must be in manual switching mode (Pn139.0 = 0).
- Gain setting 1 must be selected.
- The test without a motor function must be disabled. (Pn00C.0 = 0).
- All warnings must be cleared.
- The write prohibited setting parameter (Fn010) must be set to Write permitted (P.0000).
- The tuning-less function must be disabled (Pn170.0 = 0).

(2) When Advanced Autotuning by Reference Cannot Be Performed Successfully

Advanced autotuning by reference cannot be performed successfully under the following conditions. If the result of autotuning is not satisfactory, perform one-parameter tuning (Fn203). Refer to *5.5 One-parameter Tuning (Fn203)* for details.

- The travel distance in response to references from the host controller is smaller than the set positioning completed width (Pn522).
- The motor speed in response to references from the host controller is smaller than the set rotation detection level (Pn502).
- The stopping time, i.e., the period while the positioning completed /COIN signal is OFF, is 10 ms or less.
- The rigidity of the machine is low and vibration occurs when positioning is performed.
- The position integration function is used.
- P control operation (proportional control) is performed.
- The mode switch is used.
- The positioning completed width (Pn522) is too small.

IMPORTANT

- Advanced autotuning by reference starts adjustments based on the positioning completed width (Pn522). Set the electronic gear ratio (Pn20E/Pn210) and positioning completed width (Pn522) to the actual value during operation.
- Unless the positioning completed signal (/COIN) is turned ON within approximately 3 seconds after positioning has been completed, "WAITING" will flash. Furthermore, unless the positioning completed signal (/COIN) is turned ON within approximately 10 seconds, "Error" will flash for 2 seconds and tuning will be aborted.

Change only the overshoot detection level (Pn561) to finely adjust the amount of overshooting without changing the positioning completed width (Pn522). Because Pn561 is set by default to 100%, the allowable amount of overshooting is the same amount as that for the positioning completed width.
When Pn561 is set to 0%, the amount of overshooting can be adjusted without any overshooting in the positioning completed width. If the setting of Pn561 is changed, however, the positioning time may be extended.

Pn561	Overshoot Detection Level		Speed Position Torque		Classification
	Setting Range	Setting Unit	Factory Setting	When Enabled	
	0 to 100	1%	100	Immediately	Setup

(3) Application Restrictions by Encoder Resolution

■ When Using a 13-bit Encoder

Applicable servomotor : SGMJV-□□□A□□□

Mode selection: Fixed to Mode 1 (Mode = 1) and cannot be changed.

5.4.2 Advanced Autotuning by Reference Procedure

The following procedure is used for advanced autotuning by reference.

Advanced autotuning by reference is performed from the digital operator (option) or SigmaWin+.

Here, the operating procedure from the digital operator is described.

Refer to the *Σ-V Series User's Manual, Operation of Digital Operator* (No.: SIEP S800000 55) for basic key operations of the digital operator.

⚠ CAUTION

- When using the MP2000 Series with phase control, select the mode = 1 (standard level). If 2 or 3 is selected, phase control of the MP2000 Series may not be possible.

(1) Operating Procedure

Set the correct moment of inertia ratio in Pn103 by using the advanced autotuning before performing this procedure.

Step	Display after Operation	Keys	Operation
1	BB —FUNCTION— Fn201:AAT Fn202:Ref-AAT Fn203:OnePrmTun Fn204:A-Vib Sup	MODE/SET ∧ ∨	Press the MODE/SET Key to view the main menu for the utility function. Use the ∧ or ∨ Key to move through the list and select Fn202.
2	Status Display BB Advanced AT Mode=3 Type=2	DATA	Press the DATA Key to display the initial setting screen for advanced autotuning by reference.
3	BB Advanced AT Mode=3 Type=2	∧ ∨ SCROLL	Press the ∧, ∨, or SCROLL Key and set the items in steps 3-1 and 3-2.
3-1	■Mode Selection Select the mode. Mode = 1: Makes adjustments considering response characteristics and stability (Standard level). Mode = 2: Makes adjustments for positioning [Factory setting]. Mode = 3: Makes adjustments for positioning, giving priority to overshooting suppression.		
3-2	■Type Selection Select the type according to the machine element to be driven. If there is noise or the gain does not increase, better results may be obtained by changing the rigidity type. Type = 1: For belt drive mechanisms Type = 2: For ball screw drive mechanisms [Factory setting] Type = 3: For rigid systems in which the servomotor is directly coupled to the machine (without gear or other transmissions)		
4	BB Advanced AT Pn103=00300 Pn100=0040.0 Pn101=0020.00 Pn141=0050.0	DATA	Press the DATA Key. The advanced autotuning by reference execution screen will be displayed. Note: If the mode is set to 1, Pn102 is displayed. If the mode is set to 2 or 3, the Pn102 display will change to the Pn141.
5	RUN Advanced AT Pn103=00300 Pn100=0040.0 Pn101=0020.00 Pn141=0050.0		Send an SV_ON command from the host controller.

(cont'd)

Step	Display after Operation	Keys	Operation
6	ADJ Advanced AT Pn103=00300 Pn100=0100.0 Pn101=0006.36 Pn141=0150.0	∧ ∨	Input a reference from the host controller and then press the ∧ or ∨ Key to start the adjustment. "ADJ" will flash during adjustment on the status display. Note: Adjustment cannot be performed during "BB" is shown on the status display.
7	ADJ Advanced AT Pn103=00300 Pn100=0100.0 Pn101=0006.36 Pn141=0150.0		When the adjustment has been completed normally, "END" will flash for approximately two seconds and "ADJ" will be displayed.
8	RUN Advanced AT Pn103=00300 Pn100=0100.0 Pn101=0006.36 Pn141=0150.0	DATA	Press the DATA Key to save the settings. "DONE" will flash for approximately two seconds and "RUN" will be displayed. Note: Not to save the values set in step 6, press the MODE/SET Key. The display will return to that shown in step 1.
9	Turn ON the SERVOPACK power supply again after executing advanced autotuning by reference.		

(2) Failure in Operation

■ When "NO-OP" Flashes on the Display

Probable Cause	Corrective Actions
The main circuit power supply was OFF.	Turn ON the main circuit power supply.
An alarm or warning occurred.	Remove the cause of the alarm or the warning.
Overtraveling occurred.	Remove the cause of the overtravel.
Gain setting 2 was selected by gain switching.	Disable the automatic gain switching.
HWBB operated.	Disable the HWBB function.

■ When "Error" Flashes on the Display

Error	Probable Cause	Corrective Actions
The gain adjustment was not successfully completed.	Machine vibration is occurring or the positioning completed signal (/COIN) is turning ON and OFF when the servomotor is stopped.	• Increase the set value for Pn522. • Change the mode from 2 to 3. • If machine vibration occurs, suppress the vibration with the anti-resonance control adjustment function and the vibration suppression function.
The positioning completed signal (/COIN) did not turn ON within approximately 10 seconds after positioning adjustment was completed.	The positioning completed width is too narrow or proportional control (P control) is being used.	• Increase the set value for Pn522. • Set 0 to V_PPI of the servo command output signals (SVCMD_IO).

(3) Related Functions on Advanced Autotuning by Reference

This section describes functions related to advanced autotuning by reference.

■ Notch Filter

Usually, set this function to Auto Setting. (The notch filter is factory-set to Auto Setting.)
If this function is set to Auto Setting, vibration will be detected automatically during advanced autotuning by reference, and the notch filter will be set.

Set this function to Not Auto Setting only if you do not change the notch filter setting before executing advanced autotuning by reference.

Parameter		Function	When Enabled	Classification
Pn460	n.□□□0	Does not set the 1st notch filter automatically with the utility function.	Immediately	Tuning
	n.□□□1 [Factory setting]	Sets the 1st notch filter automatically with the utility function.		
	n.□0□□	Does not set the 2nd notch filter automatically with the utility function.		
	n.□1□□ [Factory setting]	Sets the 2nd notch filter automatically with the utility function.		

■ Anti-Resonance Control Adjustment

This function reduces low vibration frequency, which the notch filter does not detect.

Usually, set this function to Auto Setting. (The anti-resonance control is factory-set to Auto Setting.)
When this function is set to Auto Setting, vibration will be automatically detected during advanced autotuning by reference and anti-resonance control will be automatically adjusted and set.

Parameter		Function	When Enabled	Classification
Pn160	n.□□0□	Does not use the anti-resonance control automatically with the utility function.	Immediately	Tuning
	n.□□1□ [Factory setting]	Uses the anti-resonance control automatically with the utility function.		

■ Vibration Suppression

The vibration suppression function suppresses transitional vibration at frequency as low as 1 to 100 Hz that is generated mainly when positioning if the machine stand vibrates.

Usually, set this function to Auto Setting. (The vibration suppression function is factory-set to Auto Setting.)
When this function is set to Auto Setting, vibration will be automatically detected during advanced autotuning by reference and vibration suppression will be automatically adjusted and set.
Set this function to Not Auto Setting only if you do not change the setting for vibration suppression before executing advanced autotuning by reference.

Note: This function uses model following control. Therefore, the function can be executed only if the mode is set to 2 or 3.

- Related Parameters

Parameter		Function	When Enabled	Classification
Pn140	n.□0□□	Does not use the vibration suppression function automatically.	Immediately	Tuning
	n.□1□□ [Factory setting]	Uses the vibration suppression function automatically.		

■ Friction Compensation

This function compensates for changes in the following conditions.

- Changes in the viscous resistance of the lubricant, such as the grease, on the sliding parts of the machine
- Changes in the friction resistance resulting from variations in the machine assembly
- Changes in the friction resistance due to aging

Conditions to which friction compensation is applicable depend on the mode. The friction compensation setting in Pn408.3 applies when the mode is 1. Mode = 2 and Mode = 3 are adjusted with the friction compensation function regardless of the friction compensation setting in P408.3.

Friction Compensation Selecting \ Mode		Mode = 1	Mode = 2	Mode = 3
Pn408	n.0□□□ [Factory setting]	Adjusted without the friction compensation function	Adjusted with the friction compensation function	Adjusted with the friction compensation function
	n.1□□□	Adjusted with the friction compensation function		

■ Feedforward

If Pn140 is set to the factory setting and the mode setting is changed to 2 or 3, the feedforward gain (Pn109), speed feedforward (VFF) input, and torque feedforward (TFF) input will be disabled.

Set Pn140.3 to 1 if model following control is used together with the speed feedforward (VFF) input and torque feedforward (TFF) input from the host controller.

Parameter		Function	When Enabled	Classification
Pn140	n.0□□□ [Factory setting]	Model following control is not used together with the speed/torque feedforward input.	Immediately	Tuning
	n.1□□□	Model following control is used together with the speed/torque feedforward input.		

Refer to *Σ-V Series User's Manual MECHATROLINK-III Standard Servo Profile Commands* (No.: SIEP S800000 63) for details.

- Model following control is used to make optimum feedforward settings in the SERVOPACK when model following control is used with the feedforward function. Therefore, model following control is not normally used together with either the speed feedforward (VFF) input or torque feedforward (TFF) input from the host controller. However, model following control can be used with the speed feedforward (VFF) input or torque feedforward (TFF) input if required. An improper feedforward input may result in overshooting.

5.4.3 Related Parameters

The following table lists parameters related to this function and their possibility of being changed while executing this function or of being changed automatically after executing this function.

- Parameters related to this function
  These are parameters that are used or referenced when executing this function.

- Allowed changes during execution of this function
  Yes : Parameters can be changed using SigmaWin+ while this function is being executed.
  No : Parameters cannot be changed using SigmaWin+ while this function is being executed.

- Automatic changes after execution of this function
  Yes : Parameter set values are automatically set or adjusted after execution of this function.
  No : Parameter set values are not automatically set or adjusted after execution of this function.

Parameter	Name	Mid-execution changes	Automatic changes
Pn100	Speed Loop Gain	No	Yes
Pn101	Speed Loop Integral Time Constant	No	Yes
Pn102	Position Loop Gain	No	Yes
Pn103	Moment of Inertia Ratio	No	No
Pn121	Friction Compensation Gain	No	Yes
Pn123	Friction Compensation Coefficient	No	Yes
Pn124	Friction Compensation Frequency Correction	No	No
Pn125	Friction Compensation Gain Correction	No	Yes
Pn401	Torque Reference Filter Time Constant	No	Yes
Pn408	Torque Related Function Switch	Yes	Yes
Pn409	1st Notch Filter Frequency	No	Yes
Pn40A	1st Notch Filter Q Value	No	Yes
Pn40C	2nd Notch Filter Frequency	No	Yes
Pn40D	2nd Notch Filter Q Value	No	Yes
Pn140	Model Following Control Related Switch	Yes	Yes
Pn141	Model Following Control Gain	No	Yes
Pn142	Model Following Control Gain Compensation	No	Yes
Pn143	Model Following Control Bias (Forward Direction)	No	Yes
Pn144	Model Following Control Bias (Reverse Direction)	No	Yes
Pn145	Vibration Suppression 1 Frequency A	No	Yes
Pn146	Vibration Suppression 1 Frequency B	No	Yes
Pn147	Model Following Control Speed Feedforward Compensation	No	Yes
Pn160	Anti-Resonance Control Related Switch	Yes	Yes
Pn161	Anti-Resonance Frequency	No	Yes
Pn163	Anti-Resonance Damping Gain	No	Yes

5.5 One-parameter Tuning (Fn203)

Adjustments with one-parameter tuning are described below.

5.5.1 One-parameter Tuning

One-parameter tuning is used to manually make tuning level adjustments during operation with a position reference or speed reference input from the host controller.

One-parameter tuning enables automatically setting related servo gain settings to balanced conditions by adjusting one or two tuning levels.

One-parameter tuning performs the following adjustments.

- Gains (e.g., position loop gain and speed loop gain)
- Filters (torque reference filter and notch filter)
- Friction compensation
- Anti-resonance control

Refer to *5.5.4 Related Parameters* for parameters used for adjustments.

Perform one-parameter tuning if satisfactory response characteristics is not obtained with advanced autotuning or advanced autotuning by reference.

To fine-tune each servo gain after one-parameter tuning, refer to *5.8 Additional Adjustment Function*.

⚠ CAUTION

- Vibration or overshooting may occur during adjustment. To ensure safety, perform one-parameter tuning in a state where the SERVOPACK can come to an emergency stop at any time.

(1) Preparation

Check the following settings before performing one-parameter tuning.
The message “NO-OP” indicating that the settings are not appropriate will be displayed, if all of the following conditions are not met.

- The test without a motor function must be disabled (Pn00C.0 = 0).
- The write prohibited setting parameter (Fn010) must be set to Write permitted (P.0000).
- The tuning-less function must be disabled (Pn170.0 = 0).
- The tuning mode must be set to 0 or 1 when performing speed control.

5.5.2 One-parameter Tuning Procedure

The following procedure is used for one-parameter tuning.

There are the following two operation procedures depending on the tuning mode being used.

- When the tuning mode is set to 0 or 1, the model following control will be disabled and one-parameter tuning will be used as the tuning method for applications other than positioning.
- When the tuning mode is set to 2 or 3, the model following control will be enabled and it can be used for tuning for positioning.

One-parameter tuning is performed from the digital operator (option) or SigmaWin+.

Make sure that the moment of inertia ratio (Pn103) is set correctly using advance autotuning before beginning operation.

The following section provides the operating procedure from the digital operator.

Refer to the *Σ-V Series User's Manual, Operation of Digital Operator* (No.: SIEP S800000 55) for basic key operations of the digital operator.

⚠ CAUTION

- When using the MP2000 Series with phase control, select the tuning mode = 0 or 1. If 2 or 3 is selected, phase control of the MP2000 Series may not be possible.

(1) Digital Operator Operating Procedure

■ Setting the Tuning Mode 0 or 1

Step	Display after Operation	Keys	Operation
1	BB —FUNCTION— Fn202:Ref-AAT Fn203:OnePrmTun Fn204:A-Vib Sup Fn205:Vib Sup	MODE/SET ∧ ∨	Press the MODE/SET Key to view the main menu for the utility function. Press the ∧ or ∨ Key to move through the list and select Fn203.
2	Status Display BB —OnePrmTun— Pn103=00300	DATA	Press the DATA Key to display the moment of inertia ratio set in Pn103 at present. Move the digit with the < or > Key and change the value with the ∧ or ∨ Key.
3	BB —OnePrmTun— Setting Tuning Mode = 0 Type = 2	DATA	Press the DATA Key to display the initial setting screen for one-parameter tuning.
4	BB —OnePrmTun— Setting Tuning Mode = 0 Type = 2	∧ ∨ SCROLL	Press the ∧ , ∨, or SCROLL Key and set the items in steps 4-1 and 4-2.
4-1	■Tuning Mode Select the tuning mode. Select the tuning mode 0 or 1. Tuning Mode = 0: Makes adjustments giving priority to stability. Tuning Mode = 1: Makes adjustments giving priority to responsiveness.		

(cont'd)

Step	Display after Operation	Keys	Operation
4-2	■Type Selection Select the type according to the machine element to be driven. If there is noise or the gain does not increase, better results may be obtained by changing the rigidity type. Type = 1: For belt drive mechanisms Type = 2: For ball screw drive mechanisms [Factory setting] Type = 3: For rigid systems in which the servomotor is directly coupled to the machine (without gear or other transmissions).		
5	RUN —OnePrmTun— Setting Tuning Mode = 0 Type = 2		If the servomotor power is OFF, send an SV_ON command from the host controller. The display will change from "BB" to "RUN." If the servomotor power is ON, go to step 6.
6	RUN —OnePrmTun— Pn100=0040.0 Pn101=0020.00 Pn102=0040.0	DATA	Press the DATA Key to display the set value.
7	RUN —OnePrmTun— LEVEL = 0050 NF1 NF2 ARES	DATA	Press the DATA Key again to display the LEVEL setting screen.
8	RUN —OnePrmTun— LEVEL = 0050 NF1 NF2 ARES	< > ∧ ∨	If readjustment is required, select the digit with the < or > Key or change the LEVEL with the ∧ or ∨ Key. Check the response. If readjustment is not required, go to step 9. Note: The higher the level, the greater the responsiveness will be. If the value is too large, however, vibration will occur. • If vibration occurs, press the JOG SVON Key. The SERVOPACK will automatically detect the vibration frequencies and make notch filter or an anti-resonance control settings. When the notch filter is set, "NF1" or "NF2" will be displayed on the bottom row. When the anti-resonance control is set, "ARES" will be displayed in the lower right corner. RUN —OnePrmTun— LEVEL=0070 NF1 NF2 ARES • If the vibration is great, the vibration frequency will be detected automatically even if the JOG SVON Key is not pressed and a notch filter or an anti-resonance control will be set.
9	RUN —OnePrmTun— Pn100=0050.0 Pn101=0016.0 Pn102=0050.0	DATA	Press the DATA Key. A confirmation screen will be displayed after LEVEL adjustment.
10	RUN —OnePrmTun— Pn100=0050.0 Pn101=0016.0 Pn102=0050.0	DATA	• Press the DATA Key to save the adjusted values. After the data is saved, "DONE" will flash for approximately two seconds and then "RUN" will be displayed. • To return to the previous value, press the MODE/SET Key. • Press the < Key to readjust the level without saving the values.
11	RUN —FUNCTION— Fn202:Ref-AAT Fn203:OnePrmTun Fn204:A-Vib Sup Fn205:Vib Sup	MODE/SET	Press the MODE/SET Key to complete the one-parameter tuning operation. The screen in step 1 will appear again.

Note: The status display will always be RUN when the servomotor power is ON.

■ Setting the Tuning Mode 2 or 3

Step	Display after Operation	Keys	Operation
1	BB —FUNCTION— Fn202:Ref-AAT Fn203:OnePrmTun Fn204:A-Vib Sup Fn205:Vib Sup	MODE/SET ∧ ∨	Press the MODE/SET Key to view the main menu for the utility function. Press the ∧ or ∨ Key to move through the list and select Fn203.
2	Status Display BB —OnePrmTun— Pn103=00300	DATA	Press the DATA Key to display the moment of inertia ratio set in Pn103 at present. Move the digit with the < or > Key and change the value with the ∧ or ∨ Key.
3	BB —OnePrmTun— Setting Tuning Mode = 2 Type = 2	DATA	Press the DATA Key to display the initial setting screen for one-parameter tuning.
4	BB —OnePrmTun— Setting Tuning Mode = 2 Type = 2	∧ ∨ SCROLL	Press the ∧ , ∨, or SCROLL Key and set the items in steps 4-1 and 4-2.
4-1	■Tuning Mode Select the tuning mode. Select the tuning mode 2 or 3. Tuning Mode = 2: Enables model following control and makes adjustments for positioning. Tuning Mode = 3: Enables model following control, makes adjustments for positioning, and suppresses over-shooting.		
4-2	■Type Selection Select the type according to the machine element to be driven. If there is noise or the gain does not increase, better results may be obtained by changing the rigidity type. Type = 1: For belt drive mechanisms Type = 2: For ball screw drive mechanisms [Factory setting] Type = 3: For rigid systems in which the servomotor is directly coupled to the machine (without gear or other transmissions).		
5	RUN —OnePrmTun— Setting Tuning Mode=2 Type=2		If the servomotor power is OFF, send an SV_ON command from the host controller. The display will change from "BB" to "RUN." If the servomotor power is ON, go to step 6.
6	RUN —OnePrmTun— Pn100=0040.0 Pn101=0020.00 Pn141=0050.0	DATA	Press the DATA Key to display the set value.
7	RUN —OnePrmTun— FF LEVEL=0050. 0 FB LEVEL=0040. 0	DATA	Press the DATA Key again to display FF LEVEL and FB LEVEL setting screens.

(cont'd)

Step	Display after Operation	Keys	Operation
8	RUN —OnePrmTun— FF LEVEL=0050. 0 FB LEVEL=0040. 0	< > ∧ ∨	If readjustment is required, select the digit with the < or > Key or change the FF LEVEL and FB LEVEL with the ∧ or ∨ Key. Check the response. If readjustment is not required, go to step 9. Note: The higher the FF LEVEL, the positioning time will be shorter and the response will be better. If the level is too high, however, overshooting or vibration may occur. Overshooting will be reduced if the FB LEVEL is increased. ■ If Vibration Occurs • If vibration occurs, press the JOG SVON Key. The SERVOPACK will automatically detect the vibration frequencies and make notch filter or an anti-resonance control settings. When the notch filter is set, "NF1" and "NF2" are displayed on the bottom row. When the anti-resonance control is set, "ARES" will be displayed on the bottom low. RUN —OnePrmTun— FF LEVEL=0050. 0 FB LEVEL=0040. 0 NF1 NF2 ARES ■ If Vibration Is Large • Even if the JOG SVON Key is not pressed, the SERVOPACK will automatically detect the vibration frequencies and make notch filter or anti-resonance control settings. Notes: • If the FF LEVEL is changed when the servomotor is in operation, it will not be reflected immediately. The changes will be effective after the servomotor comes to a stop with no reference input and then the servomotor starts operation If the FF LEVEL is changed too much during operation, vibration may occur because the responsiveness is changed rapidly when the settings become effective. • The message "FF LEVEL" flashes until the machine reaches the effective FF LEVEL. If the servomotor does not stop within approximately 10 seconds after changing the setting, a timeout will occur. The setting will be returned to the previous value.
9	RUN —OnePrmTun— Pn100=0040.0 Pn101=0020.00 Pn141=0050.0 NF1	DATA	Press the DATA Key to display the confirmation screen after level adjustment.
10	RUN —OnePrmTun— Pn100=0040.0 Pn101=0020.00 Pn141=0050.0 NF1	DATA	• Press the DATA Key to save the adjusted values. After the data is saved, "DONE" will flash for approximately two seconds and then "RUN" will be displayed. • To return to the previous value, press the MODE/SET Key. • Press the < Key to readjust the level without saving the values.
11	RUN —FUNCTION— Fn202:Ref-AAT Fn203:OnePrmTun Fn204:A-Vib Sup Fn205:Vib Sup	MODE/SET	Press the MODE/SET Key to complete the one-parameter tuning operation. The screen in step 1 will appear again.

Note: The status display will always be RUN when the servomotor power is ON.

(2) Related Functions on One-parameter Tuning

This section describes functions related to one-parameter tuning.

■ Notch Filter

Usually, set this function to Auto Setting. (The notch filter is factory-set to Auto Setting.)
If this function is set to Auto Setting, vibration will be detected automatically during one-parameter tuning and the notch filter will be set.

Set this function to Not Auto Setting only if you do not change the notch filter setting before executing one-parameter tuning.

Parameter		Function	When Enabled	Classification
Pn460	n.□□□0	Does not set the 1st notch filter automatically with the utility function.	Immediately	Tuning
	n.□□□1 [Factory setting]	Sets the 1st notch filter automatically with the utility function.		
	n.□0□□	Does not set the 2nd notch filter automatically with the utility function.		
	n.□1□□ [Factory setting]	Sets the 2nd notch filter automatically with the utility function.		

■ Anti-Resonance Control Adjustment

This function reduces low vibration frequency, which the notch filter does not detect.

Usually, set this function to Auto Setting. (The anti-resonance control is factory-set to Auto Setting.)
When this function is set to Auto Setting, vibration will be automatically detected during one-parameter tuning and anti-resonance control will be automatically adjusted and set.

Parameter		Function	When Enabled	Classification
Pn160	n.□□0□	Does not use the anti-resonance control automatically with the utility function.	Immediately	Tuning
	n.□□1□ [Factory setting]	Uses the anti-resonance control automatically with the utility function.		

"ARES" will flash on the digital operator when anti-resonance control adjustment function is set.

```
RUN      —OnePrmTun—
FF  LEVEL  =  0050
FB  LEVEL  =  0040

 NF1  NF2     ARES
```

■ Friction Compensation

This function compensates for changes in the following conditions.

- Changes in the viscous resistance of the lubricant, such as the grease, on the sliding parts of the machine
- Changes in the friction resistance resulting from variations in the machine assembly
- Changes in the friction resistance due to aging

Conditions to which friction compensation is applicable depend on the tuning mode. The friction compensation setting in F408.3 applies when the mode is 0 or 1. Tuning Mode = 2 and Tuning Mode = 3 are adjusted with the friction compensation function regardless of the friction compensation setting in P408.3.

Friction Compensation Selecting \ Mode		Tuning Mode = 0	Tuning Mode = 1	Tuning Mode = 2	Tuning Mode = 3
Pn408	n.0□□□ [Factory setting]	Adjusted without the friction compensation function	Adjusted without the friction compensation function	Adjusted with the friction compensation function	Adjusted with the friction compensation function
	n.1□□□	Adjusted with the friction compensation function	Adjusted with the friction compensation function		

■ Feedforward

If Pn140 is set to the factory setting and the tuning mode setting is changed to 2 or 3, the feedforward gain (Pn109), speed feedforward (VFF) input, and torque feedforward (TFF) input will be disabled.

Set Pn140.3 to 1 if model following control is used together with the speed feedforward (VFF) input and torque feedforward (TFF) input from the host controller.

Parameter		Function	When Enabled	Classification
Pn140	n.0□□□ [Factory setting]	Model following control is not used together with the speed/torque feedforward input.	Immediately	Tuning
	n.1□□□	Model following control is used together with the speed/torque feedforward input.		

Refer to *Σ-V Series User's Manual MECHATROLINK-III Standard Servo Profile Commands* (No.: SIEP S800000 63) for details.

IMPORTANT

- Model following control is used to make optimum feedforward settings in the SERVOPACK when model following control is used with the feedforward function. Therefore, model following control is not normally used together with either the speed feedforward (VFF) input or torque feedforward (TFF) input from the host controller. However, model following control can be used with the speed feedforward (VFF) input or torque feedforward (TFF) input if required. An improper feedforward input may result in overshooting.

5.5.3 One-parameter Tuning Example

The following procedure is used for one-parameter tuning on the condition that the tuning mode is set to 2 or 3. This mode is used to reduce positioning time.

Step	Measuring Instrument Display Example	Operation
1	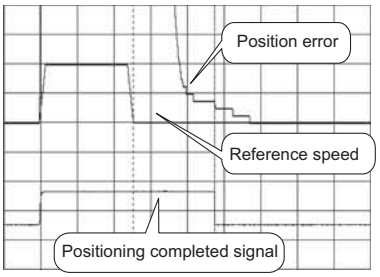	Measure the positioning time after setting the moment of inertia ratio (Pn103) correctly. Tuning will be completed if the specifications are met here. The tuning results will be saved in the SERVOPACK.
2	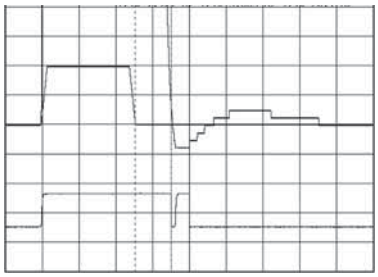	The positioning time will become shorter if the FF level is increased. The tuning will be completed if the specifications are met. The tuning results will be saved in the SERVOPACK. If overshooting occurs before the specifications are met, go to step 3.
3	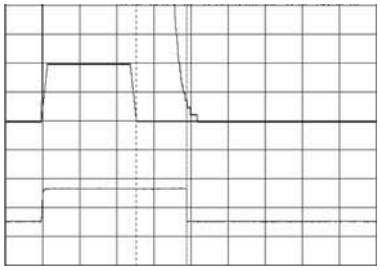	Overshooting will be reduced if the FB level is increased. If the overshooting is eliminated, go to step 4.
4	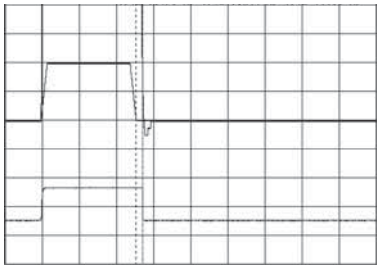	The graph shows overshooting generated with the FF level increased after step 3. In this state, the overshooting occurs, but the positioning settling time is shorter. The tuning will be completed if the specifications are met. The adjustment results are saved in the SERVOPACK. If overshooting occurs before the specifications are met, repeat steps 3 and 4. If vibration occurs before the overshooting is eliminated, the vibration will be suppressed by the automatic notch filter and anti-resonance control. Note: The vibration frequencies may not be detected if the vibration is too small. If that occurs, press the JOG SVON Key to forcibly detect the vibration frequencies.
5		The adjustment results are saved in the SERVOPACK.

5.5.4 Related Parameters

The following table lists parameters related to this function and their possibility of being changed while executing this function or of being changed automatically after executing this function.

• Parameters related to this function
These are parameters that are used or referenced when executing this function.

• Allowed changes during execution of this function
Yes : Parameters can be changed using SigmaWin+ while this function is being executed.
No : Parameters cannot be changed using SigmaWin+ while this function is being executed.

• Automatic changes after execution of this function
Yes : Parameter set values are automatically set or adjusted after execution of this function.
No : Parameter set values are not automatically set or adjusted after execution of this function.

Parameter	Name	Mid-execution changes	Automatic changes
Pn100	Speed Loop Gain	No	Yes
Pn101	Speed Loop Integral Time Constant	No	Yes
Pn102	Position Loop Gain	No	Yes
Pn103	Moment of Inertia Ratio	No	No
Pn121	Friction Compensation Gain	No	Yes
Pn123	Friction Compensation Coefficient	No	Yes
Pn124	Friction Compensation Frequency Correction	No	No
Pn125	Friction Compensation Gain Correction	No	Yes
Pn401	Torque Reference Filter Time Constant	No	Yes
Pn408	Torque Related Function Switch	Yes	Yes
Pn409	1st Notch Filter Frequency	No	Yes
Pn40A	1st Notch Filter Q Value	No	Yes
Pn40C	2nd Notch Filter Frequency	No	Yes
Pn40D	2nd Notch Filter Q Value	No	Yes
Pn140	Model Following Control Related Switch	Yes	Yes
Pn141	Model Following Control Gain	No	Yes
Pn142	Model Following Control Gain Compensation	No	Yes
Pn143	Model Following Control Bias (Forward Direction)	No	Yes
Pn144	Model Following Control Bias (Reverse Direction)	No	Yes
Pn145	Vibration Suppression 1 Frequency A	No	No
Pn146	Vibration Suppression 1 Frequency B	No	No
Pn147	Model Following Control Speed Feedforward Compensation	No	Yes
Pn160	Anti-Resonance Control Related Switch	Yes	Yes
Pn161	Anti-Resonance Frequency	No	Yes
Pn163	Anti-Resonance Damping Gain	No	Yes

5.6 Anti-Resonance Control Adjustment Function (Fn204)

This section describes the anti-resonance control adjustment function.

5.6.1 Anti-Resonance Control Adjustment Function

The anti-resonance control adjustment function increases the effectiveness of the vibration suppression after one-parameter tuning. This function is effective in supporting anti-resonance control adjustment if the vibration frequencies are from 100 to 1000 Hz.

This function rarely needs to be used because it is automatically set by the advanced autotuning or advanced autotuning by reference input. Use this function only if fine-tuning is required, or vibration detection is failed and readjustment is required.

Perform one-parameter tuning (Fn203) or use another method to improve the response characteristics after performing this function. If the anti-resonance gain is increased with one-parameter tuning performed, vibration may result again. If that occurs, perform this function again to fine-tune the settings.

⚠ CAUTION

- If this function is executed, related parameters will be set automatically. Therefore, there will be a large response change after this function is executed. Enable the function in a state where the machine can come to an emergency stop at any time to ensure the safety operation of the machine.
- Be sure to set a suitable value for the moment of inertia ratio (Pn103) using advanced autotuning before executing the anti-resonance control adjustment function. If the setting greatly differs from the actual moment of inertia ratio, normal control of the machine may not be possible, and vibration may result.

IMPORTANT

- This function detects vibration between 100 and 1000 Hz. Vibration will not be detected for frequencies outside of this range, and instead, "F----" will be displayed. If that occurs, use one-parameter tuning with tuning mode 2 selected to automatically set a notch filter or use the vibration suppression function (Fn205).
- Vibration can be reduced more effectively by increasing the anti-resonance damping gain (Pn163). The amplitude of vibration may become larger if the damping gain is excessively high. Increase the damping gain from about 0% to 200% in 10% increments while checking the effect of vibration reduction. If the effect of vibration reduction is still insufficient at a gain of 200%, cancel the setting, and lower the control gain using a different method, such as one-parameter tuning.

(1) Before Performing Anti-Resonance Control Adjustment Function

Check the following settings before performing anti-resonance control adjustment function.
The message “NO-OP” indicating that the settings are not appropriate will be displayed, if all of the following conditions are not met.

- The tuning-less function must be disabled (Pn170.0 = 0).
- The test without a motor function must be disabled (Pn00C.0 = 0).
- The control must not be set to torque control.
- The write prohibited setting parameter (Fn010) must be set to Write permitted (P.0000).

5.6.2 Anti-Resonance Control Adjustment Function Operating Procedure

With this function, an operation reference is sent, and the function is executed while vibration is occurring.

Anti-resonance control adjustment function is performed from the digital operator (option) or SigmaWin+. The following methods can be used for the anti-resonance control adjustment function.

- Using anti-resonance control for the first time
  - With undetermined vibration frequency
  - With determined vibration frequency
- For fine-tuning after adjusting the anti-resonance control

The following describes the operating procedure from the digital operator.

Refer to the *Σ-V Series User's Manual, Operation of Digital Operator* (No.: SIEP S800000 55) for basic key operations of the digital operator.

(1) Using Anti-Resonance Control for the First Time

■ With Undetermined Vibration Frequency

Step	Display after Operation	Keys	Operation
1	RUN —FUNCTION— Fn203:OnePrmTun Fn204:A-Vib Sup Fn205:Vib Sup Fn206:Easy FFT	MODE/SET ∧ ∨	Press the MODE/SET Key to view the main menu for the utility function. Use the ∧ or ∨ Key to move through the list, select Fn204.
2	Status Display RUN — Vib Sup— Tuning Mode = 0	DATA	Press the DATA Key to display the initial setting screen for tuning mode.
3	RUN — Vib Sup— Tuning Mode = 0	∧ ∨	Press the ∧ or ∨ Key and set the tuning mode "0."
4	RUN — Vib Sup— freq = ---- Hz damp = 0000	DATA	Press the DATA Key while "Tuning Mode = 0" is displayed. The screen shown on the left will appear. The detection of vibration frequencies will start and "freq" will flash. Return to step 3 if vibration is not detected. Note: If vibration is not detected even when vibration is occurring, lower the vibration detection sensitivity (Pn311). When this parameter is lowered, the detection sensitivity will be increased. Vibration may not be detected accurately if too small value is set.
5	RUN — Vib Sup— freq = 0400 Hz damp = 0000		The vibration frequency will be displayed in "freq" if vibration is detected. 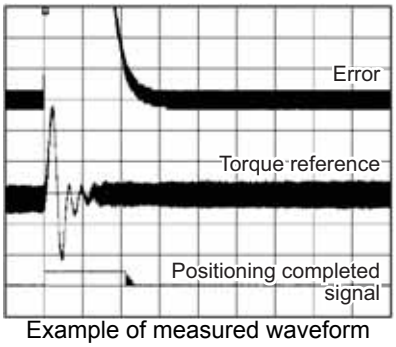 Example of measured waveform

(cont'd)

Step	Display after Operation	Keys	Operation
6	RUN — Vib Sup— freq = 0400 Hz damp = 0000	DATA	Press the DATA Key. The cursor will move to "damp," and the flashing of "freq" will stop.
7	RUN — Vib Sup— freq = 0400 Hz damp = 0120	< > ∧ ∨	Select the digit with the < or > Key, and press the ∧ or ∨ Key to set the damping gain. 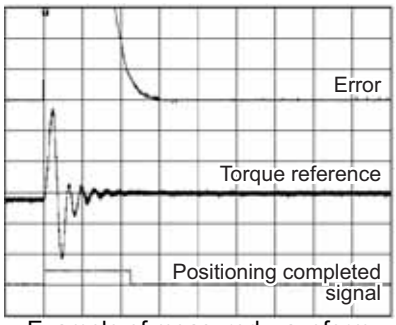 Example of measured waveform Note: Increase the damping gain from about 0% to 200% in 10% increments while checking the effect of vibration reduction. If vibration reduction is still insufficient at a gain of 200%, cancel the setting, and lower the control gain by using a different method, such as one-parameter tuning.
8	RUN — Vib Sup— freq = 0400 Hz damp = 0120	SCROLL	If fine tuning of the frequency is necessary, press the SCROLL Key. The cursor will move from "damp" to "freq." If fine-tuning is not necessary, skip step 9 and go to step 10.
9	RUN — Vib Sup— freq = 0420 Hz damp = 0120	< > ∧ ∨	Select the digit with the < or > Key, and press the ∧ or ∨ Key to fine-tune the frequency.
10	RUN — Vib Sup— freq = 0420 Hz damp = 0120	DATA	Press the DATA Key to save the settings. "DONE" will flash for approximately two seconds and "RUN" will be displayed.
11	RUN —FUNCTION— Fn203:OnePrmTun Fn204:A-Vib Sup Fn205:Vib Sup Fn206:Easy FFT	MODE/SET	Press the MODE/SET Key to complete the anti-resonance control adjustment function. The screen in step 1 will appear again.

■ With Determined Vibration Frequency

Step	Display after Operation	Keys	Operation
1	RUN —FUNCTION— Fn203:OnePrmTun Fn204:A-Vib Sup Fn205:Vib Sup Fn206:Easy FFT	MODE/SET ∧ ∨	Press the MODE/SET Key to view the main menu for the utility function. Use the ∧ or ∨ Key to move through the list, select Fn204.
2	RUN — Vib Sup— Tuning Mode = 0	DATA	Press the DATA Key to display the initial setting screen for tuning mode.
3	RUN —FUNCTION— Tuning Mode = 1	∧ ∨	Press the ∧ or ∨ Key and set the tuning mode "1."
4	RUN — Vib Sup— freq = 0100 Hz damp = 0000	DATA	Press the DATA Key while "Tuning Mode = 1" is displayed. The screen shown on the left will appear and "freq" will flash. 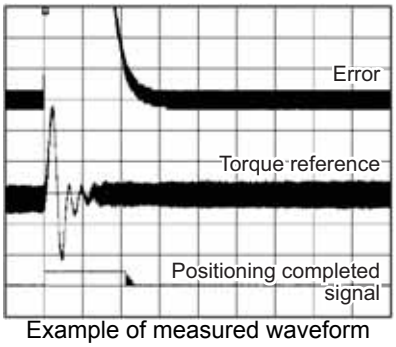 Example of measured waveform
5	RUN — Vib Sup— freq = 0100 Hz damp = 0000	< > ∧ ∨	Select the digit with the < or > Key, and press the ∧ or ∨ Key to adjust the frequency.
6	RUN — Vib Sup— freq = 0400 Hz damp = 0000	SCROLL	Press the SCROLL Key. The cursor will move to "damp."

(cont'd)

Step	Display after Operation	Keys	Operation
7	RUN — Vib Sup— freq = 0400 Hz damp = 0020	< > ∧ ∨	Select the digit with the < or > Key, and press the ∧ or ∨ Key to adjust the damping gain. 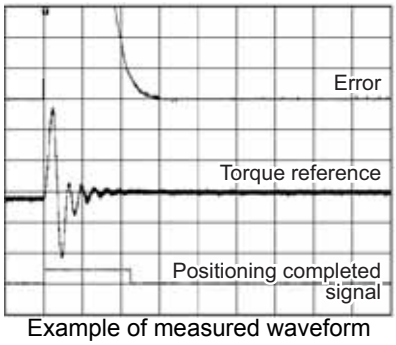 Example of measured waveform Note: Increase the damping gain from about 0% to 200% in 10% increments while checking the effect of vibration reduction. If vibration reduction is still insufficient at a gain of 200%, cancel the setting, and lower the control gain by using a different method, such as one-parameter tuning.
8	RUN — Vib Sup— freq = 0400 Hz damp = 0120	SCROLL	If fine tuning of the frequency is necessary, press the SCROLL Key. The cursor will move from "damp" to "freq." If fine-tuning is not necessary, skip step 9 and go to step 10.
9	RUN — Vib Sup— freq = 0400 Hz damp = 0120	< > ∧ ∨	Select the digit with the < or > Key, and press the ∧ or ∨ Key to fine-tune the frequency.
10	RUN — Vib Sup— freq = 0400 Hz damp = 0120	DATA	Press the DATA Key to save the settings. "DONE" will flash for approximately two seconds and "RUN" will be displayed.
11	RUN —FUNCTION— Fn203:OnePrmTun Fn204:A-Vib Sup Fn205:Vib Sup Fn206:Easy FFT	MODE/SET	Press the MODE/SET Key to complete the anti-resonance control adjustment function. The screen in step 1 will appear again.

(2) For Fine-tuning After Adjusting the Anti-Resonance Control

Step	Display after Operation	Keys	Operation
1	RUN —FUNCTION— Fn203:OnePrmTun Fn204:A-Vib Sup Fn205:Vib Sup Fn206:Easy FFT	MODE/SET ∧ ∨	Press the MODE/SET Key to view the main menu for the utility function. Use the ∧ or ∨ Key to move through the list, select Fn204.
2	RUN —FUNCTION— Tuning Mode = 1	DATA	Press the DATA Key to display the "Tuning Mode = 1" as shown on the left.
3	RUN — Vib Sup— freq = 0400 Hz damp = 0120	DATA	Press the DATA Key while "Tuning Mode = 1" is displayed. The screen shown on the left will appear and "damp" will flash.

(cont'd)

Step	Display after Operation	Keys	Operation
4	RUN — Vib Sup— freq = 0400 Hz damp = 0150	< > ∧ ∨	Select the digit with the < or > Key, and press the ∧ or ∨ Key to set the damping gain. Note: Increase the damping gain from about 0% to 200% in 10% increments while checking the effect of vibration reduction. If vibration reduction is still insufficient at a gain of 200%, cancel the setting, and lower the control gain by using a different method, such as one-parameter tuning.
5	RUN — Vib Sup— freq = 0400 Hz damp = 0150	SCROLL	If fine tuning of the frequency is necessary, press the SCROLL Key. The cursor will move from "damp" to "freq." If fine-tuning is not necessary, skip step 6 and go to step 7.
6	RUN — Vib Sup— freq = 0420 Hz damp = 0150	< > ∧ ∨	Select the digit with the < or > Key, and press the ∧ or ∨ Key to fine-tune the frequency.
7	RUN — Vib Sup— freq = 0420 Hz damp = 0150	DATA	Press the DATA Key to save the settings. "DONE" will flash for approximately two seconds and "RUN" will be displayed.
8	RUN —FUNCTION— Fn203:OnePrmTun Fn204:A-Vib Sup Fn205:Vib Sup Fn206:Easy FFT	MODE/SET	Press the MODE/SET Key to complete the anti-resonance control adjustment function. The screen in step 1 will appear again.

5.6.3 Related Parameters

The following table lists parameters related to this function and their possibility of being changed while executing this function or of being changed automatically after executing this function.

- Parameters related to this function
  These are parameters that are used or referenced when executing this function.

- Allowed changes during execution of this function
  Yes : Parameters can be changed using SigmaWin+ while this function is being executed.
  No : Parameters cannot be changed using SigmaWin+ while this function is being executed.

- Automatic changes after execution of this function
  Yes : Parameter set values are automatically set or adjusted after execution of this function.
  No : Parameter set values are not automatically set or adjusted after execution of this function.

Parameter	Name	Mid-execution changes	Automatic changes
Pn160	Anti-Resonance Control Related Switch	Yes	Yes
Pn161	Anti-Resonance Frequency	No	Yes
Pn162	Anti-Resonance Gain Compensation	Yes	No
Pn163	Anti-Resonance Damping Gain	No	Yes
Pn164	Anti-Resonance Filter Time Constant 1 Compensation	Yes	No
Pn165	Anti-Resonance Filter Time Constant 2 Compensation	Yes	No

5.7 Vibration Suppression Function (Fn205)

The vibration suppression function is described in this section.

5.7.1 Vibration Suppression Function

The vibration suppression function suppresses transitional vibration at frequency as low as 1 to 100 Hz that is generated mainly when positioning if the machine stand vibrates.

This function is set automatically when advanced autotuning or advanced autotuning by reference is executed. In most cases, this function is not necessary. Use this function only if fine-tuning is required or readjustment is required as a result of a failure to detect vibration.

Perform one-parameter tuning (Fn203) if required to improve the response characteristics after performing this function.

⚠ CAUTION

- If this function is executed, related parameters will be set automatically. Therefore, there will be a large response change after this function is enabled or disabled. Enable the function in a state where the machine can come to an emergency stop at any time to ensure the safety operation of the machine.
- Be sure to set a suitable value for the moment of inertia ratio (Pn103) using advanced autotuning before executing the vibration suppression function. If the setting greatly differs from the actual moment of inertia ratio, normal control of the SERVOPACK may not be possible, and vibration may result.
- Phase control of the MP2000 Series may not be possible, if the vibration suppression function is performed when using the MP2000 Series with phase control.

IMPORTANT

- This function detects vibration frequency between 1 to 100 Hz. Vibration will not be detected for frequencies outside of this range, and instead, "F-----" will be displayed.
- Frequency detection will not be performed if no vibration results from position error or the vibration frequencies are outside the range of detectable frequencies. If so, use a device, such as a displacement sensor or vibration sensor, to measure the vibration frequency.
- If vibration frequencies automatically detected are not suppressed, the actual frequency and the detected frequency may differ. Fine-tune the detected frequency if necessary.

(1) Preparation

Check the following settings before performing the vibration suppression function.
The message “NO-OP” indicating that the settings are not appropriate will be displayed, if all of the following conditions are not met.

- The control must be set to position control.
- The tuning-less function must be disabled (Pn170.0 = 0).
- The test without a motor function must be disabled (Pn00C.0 = 0).
- The write prohibited setting parameter (Fn010) must be set to Write permitted (P.0000).

(2) Items Influencing Performance

If continuous vibration occurs when the servomotor is not rotating, the vibration suppression function cannot be used to suppress the vibration effectively. If the result is not satisfactory, perform anti-resonance control adjustment function (Fn204) or one-parameter tuning (Fn203).

(3) Detection of Vibration Frequencies

No frequency detection may be possible if the vibration does not appear as a position error or the vibration resulting from the position error is too small.

The detection sensitivity can be adjusted by changing the setting for the remained vibration detection width (Pn560) which is set as a percentage of the positioning completed width (Pn522). Perform the detection of vibration frequencies again after adjusting the remained vibration detection width (Pn560).

Pn560	Remained Vibration Detection Width		Position		Classification
	Setting Range	Setting Unit	Factory Setting	When Enabled	
	1 to 3000	0.1%	400	Immediately	Setup

Note: As a guideline, change the setting 10% at a time. The smaller the set value is, the higher the detection sensitivity will be. If the value is too small, however, the vibration may not be detected accurately.

The vibration frequencies that are automatically detected may vary somewhat with each positioning operation. Perform positioning several times and make adjustments while checking the effect of vibration suppression.

5.7.2 Vibration Suppression Function Operating Procedure

The following procedure is used for vibration suppression function.

Vibration suppression function is performed from the digital operator (option) or SigmaWin+.

The operating procedure from the digital operator is described here.

Refer to the *Σ-V Series User's Manual, Operation of Digital Operator* (No.: SIEP S800000 55) for basic key operations of the digital operator.

Note: If this function is aborted by pressing the MODE/SET Key, the SERVOPACK will continue operating until the servomotor comes to a stop. After the servomotor stops, the set value will return to the previous value.

The operating flow of the vibration suppression function is shown below.

(1) Operating Flow

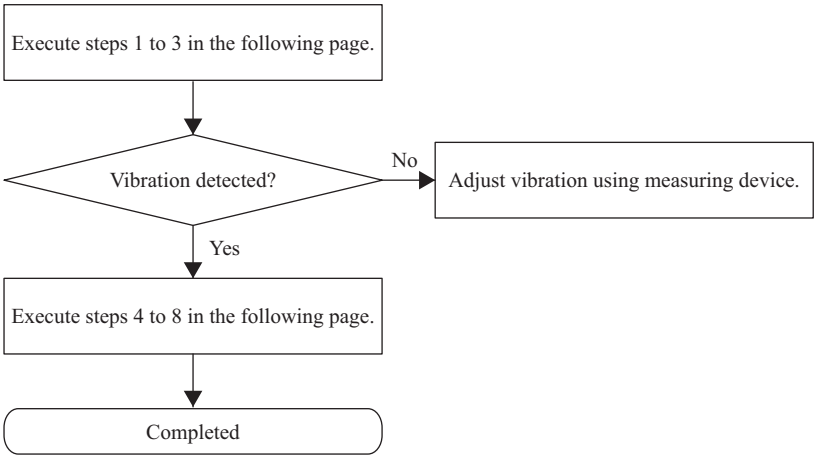

(2) Operating Procedure

Step	Display after Operation	Keys	Operation
1	Input a operation reference and take the following steps while repeating positioning.		
2	RUN —FUNCTION— Fn204:A-Vib Sup Fn205:Vib Sup Fn206:Easy FFT Fn207:V-Monitor	MODE/SET ∧ ∨	Press the MODE/SET Key to view the main menu for the utility function. Use the ∧ or ∨ Key to move through the list, select Fn205.
3	RUN —Vib Sup— Measure f=010.4Hz Setting f=050.4Hz	DATA	Press the DATA Key. The display shown on the left will appear. Measure f: Measurement frequency Setting f: Setting frequency [Factory-set to the set value for Pn145] If the setting frequency and actual operating frequency are different, "Setting" will flash. Note: Frequency detection will not be performed if there is no vibration or the vibration frequency is outside the range of detectable frequencies. The following screen will be displayed if vibration is not detected. If the vibration frequencies are not detected, prepare a means of detecting and measuring the vibration. When the vibration frequencies are measured, go to step 5 and manually set the measured vibration frequency to “Setting f.” RUN —Vib Sup— Measure f =-----Hz Setting f =050.0Hz
4	RUN —Vib Sup— Measure f=010.4Hz Setting f=010.4Hz	SCROLL	Press the SCROLL Key. The displayed “Measure f” value will be displayed as the “Setting f” value as well. Position Error Torque reference Example of measured waveform
5	RUN —Vib Sup— Measure f=010.4Hz Setting f=012.4Hz	< > ∧ ∨	If the vibration is not completely suppressed, select the digit with the < or > Key, and press the ∧ or ∨ Key to fine-tune the frequency “setting f.” Skip this step and go to step 7 if the fine-tuning of the frequency is not necessary. Note: If the setting frequency and actual operating frequency are different, "Setting" will flash.

(cont'd)

Step	Display after Operation	Keys	Operation
6	RUN —Vib Sup— Measure f=010.4Hz Setting f=012.4Hz	DATA	Press the DATA Key. The "Setting f" will change to usual display and the frequency currently displayed will be set for the vibration suppression function. 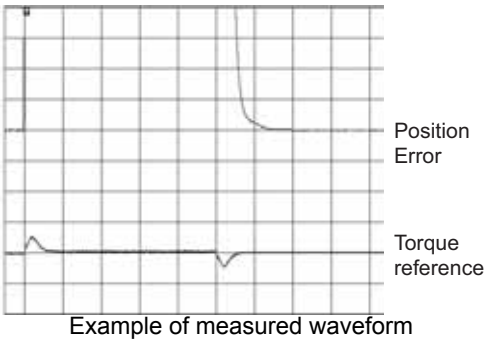 Example of measured waveform
7	RUN —Vib Sup— Measure f =-----Hz Setting f =012.4Hz	DATA	Press the DATA Key to save the setting. "DONE" will flash for approximately two seconds and "RUN" will be displayed again.
8	RUN —FUNCTION— Fn204 Fn205 Fn206 Fn207	MODE/SET	Press the MODE/SET Key to complete the vibration suppression function. The screen in step 1 will appear again.

IMPORTANT

No settings related to the vibration suppression function will be changed during operation.

If the servomotor does not stop approximately 10 seconds after the setting changes, a timeout error will result and the previous setting will be automatically enabled again.

The vibration suppression function will be enabled in step 6. The motor response, however, will change when the servomotor comes to a stop with no reference input.

(3) Related Function on Vibration Suppression Function

This section describes functions related to vibration suppression function.

■ Feedforward

The feedforward gain (Pn109), speed feedforward (VFF) input, and torque feedforward (TFF) input will be disabled in the factory setting.

Set Pn140.3 to 1 if model following control is used together with the speed feedforward (VFF) input and torque feedforward (TFF) input from the host controller.

Parameter		Function	When Enabled	Classification
Pn140	n.0□□□ [Factory setting]	Model following control is not used together with the speed/torque feedforward input.	Immediately	Tuning
	n.1□□□	Model following control is used together with the speed/torque feedforward input.		

Refer to *Σ-V Series User's Manual MECHATROLINK-III Standard Servo Profile Commands* (No.: SIEP S800000 63) for details.

IMPORTANT

- Model following control is used to make optimum feedforward settings in the SERVOPACK when model following control is used with the feedforward function. Therefore, model following control is not normally used together with either the speed feedforward (VFF) input or torque feedforward (TFF) input from the host controller. However, model following control can be used with the speed feedforward (VFF) input or torque feedforward (TFF) input if required. An improper feedforward input may result in overshooting.

5.7.3 Related Parameters

The following table lists parameters related to this function and their possibility of being changed while executing this function or of being changed automatically after executing this function.

- Parameters related to this function
  These are parameters that are used or referenced when executing this function.

- Allowed changes during execution of this function
  Yes : Parameters can be changed using SigmaWin+ while this function is being executed.
  No : Parameters cannot be changed using SigmaWin+ while this function is being executed.

- Automatic changes after execution of this function
  Yes : Parameter set values are automatically set or adjusted after execution of this function.
  No : Parameter set values are not automatically set or adjusted after execution of this function.

Parameter	Name	Mid-execution changes	Automatic changes
Pn140	Model Following Control Related Switch	Yes	Yes
Pn141	Model Following Control Gain	No	Yes
Pn142	Model Following Control Gain Compensation	No	No
Pn143	Model Following Control Bias (Forward Direction)	No	No
Pn144	Model Following Control Bias (Reverse Direction)	No	No
Pn145	Vibration Suppression 1 Frequency A	No	Yes
Pn146	Vibration Suppression 1 Frequency B	No	Yes
Pn147	Model Following Control Speed Feedforward Compensation	No	No
Pn14A	Vibration Suppression 2 Frequency	No	No
Pn14B	Vibration Suppression 2 Compensation	No	No

5.8 Additional Adjustment Function

This section describes the functions that can be used for additional fine tuning after making adjustments with advanced autotuning, advanced autotuning by reference, or one-parameter tuning.

- Switching gain settings
- Friction compensation
- Current control mode selection
- Current gain level setting
- Speed detection method selection

5.8.1 Switching Gain Settings

Two gain switching functions are available, manual switching and automatic switching. The manual switching function uses an external input signal to switch gains, and the automatic switching function switches gains automatically.

By using the gain switching function, the positioning time can be shortened by increasing the gain during positioning and vibration can be suppressed by decreasing the gain while it is stopped.

Parameter		Function	When Enabled	Classification
Pn139	n.□□□0 [Factory setting]	Manual gain switching	Immediately	Tuning
	n.□□□2	Automatic gain switching		

Note: n.□□□1 is reserved. Do not use.

For the gain combinations for switching, refer to *(1) Gain Combinations for Switching*.

For the manual gain switching, refer to *(2) Manual Gain Switching*.

For the automatic gain switching, refer to *(3) Automatic Gain Switching*.

(1) Gain Combinations for Switching

Setting	Speed Loop Gain	Speed Loop Integral Time Constant	Position Loop Gain	Torque Reference Filter	Model Following Control Gain	Model Following Control Gain Compensation	Friction Compensation Gain
Gain Setting 1	Pn100 Speed Loop Gain	Pn101 Speed Loop Integral Time Constant	Pn102 Position Loop Gain	Pn401 Torque Reference Filter Time Constant	Pn141* Model Following Control Gain	Pn142* Model Following Control Gain Compensation	Pn121 Friction Compensation Gain
Gain Setting 2	Pn104 2nd Speed Loop Gain	Pn105 2nd Speed Loop Integral Time Constant	Pn106 2nd Position Loop Gain	Pn412 1st Step 2nd Torque Reference Filter Time Constant	Pn148* 2nd Model Following Control Gain	Pn149* 2nd Model Following Control Gain Compensation	Pn122 2nd Gain for Friction Compensation

* The switching gain settings for the model following control gain and the model following control gain compensation are available only for manual gain switching. To enable the gain switching of these parameters, a gain switching input signal must be sent, and the following conditions must be met.
- No command being executed.
- Motor having been completely stopped.

If these conditions are not satisfied, the applicable parameters will not be switched although the other parameters shown in this table will be switched.

(2) Manual Gain Switching

Manual gain switching uses G-SEL of the servo command output signals (SVCMD_IO) to switch between gain setting 1 and gain setting 2.

Type	Command Name	Setting	Meaning
Input	G-SEL of the servo command output signals (SVCMD_IO)	0	Switches to gain setting 1.
		1	Switches to gain setting 2.

(3) Automatic Gain Switching

Automatic gain switching is enabled only in position control. The switching conditions are specified using the following settings.

Parameter Setting		Switching Condition	Setting	Switching Wait Time	Switching Time
Pn139	n.□□□2	Condition A satisfied.	Gain setting 1 to gain setting 2	Pn135 Gain Switching Waiting Time 1	Pn131 Gain Switching Time 1
		Condition A not satisfied.	Gain setting 2 to gain setting 1	Pn136 Gain Switching Waiting Time 2	Pn132 Gain Switching Time 2

Select one of the following settings for switching condition A.

Parameter		Switching Condition A for Position Control	For Other than Position Control (No Switching)	When Enabled	Classification
Pn139	n.□□0□ [Factory setting]	Positioning completed signal (/COIN) ON	Fixed in gain setting 1	Immediately	Tuning
	n.□□1□	Positioning completed signal (/COIN) OFF	Fixed in gain setting 2		
	n.□□2□	Positioning near signal (/NEAR) ON	Fixed in gain setting 1		
	n.□□3□	Positioning near signal (/NEAR) OFF	Fixed in gain setting 2		
	n.□□4□	No output for position reference filter and position reference input OFF	Fixed in gain setting 1		
	n.□□5□	Position reference input ON	Fixed in gain setting 2		

Automatic switching pattern 1 (Pn139.0 = 2)

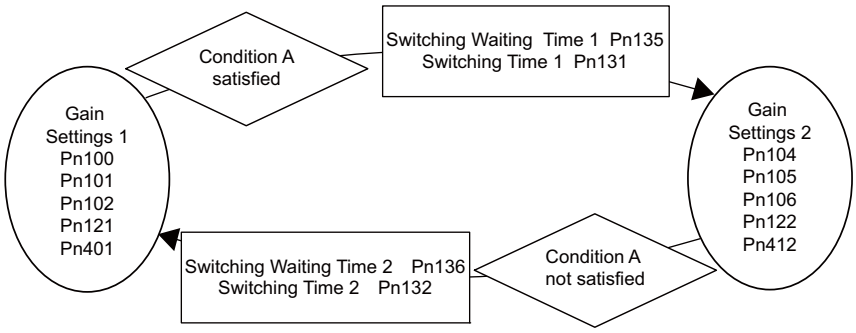

■ Relationship between the Waiting and Switching Times for Gain Switching

In this example, the "positioning completed signal (/COIN) ON" condition is set as condition A for automatic gain switching. The position loop gain is switched from the value in Pn102 (position loop gain) to the value in Pn106 (2nd position loop gain). When the /COIN signal goes ON, the switching operation begins after the waiting time set in Pn135. The switching operation changes the position loop gain linearly from Pn102 to Pn106 within the switching time set in Pn131.

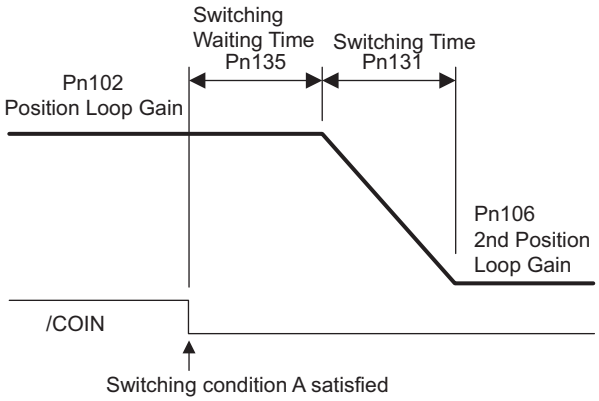

Note: Automatic gain switching is available in the PI and I-P controls (Pn10B).

(4) Related Parameters

Pn100	Speed Loop Gain			Speed Position	Classification
	Setting Range	Setting Unit	Factory Setting	When Enabled	
	10 to 20000	0.1 Hz	400	Immediately	Tuning
Pn101	Speed Loop Integral Time Constant			Speed Position	Classification
	Setting Range	Setting Unit	Factory Setting	When Enabled	
	15 to 51200	0.01 ms	2000	Immediately	Tuning
Pn102	Position Loop Gain			Position	Classification
	Setting Range	Setting Unit	Factory Setting	When Enabled	
	10 to 20000	0.1/s	400	Immediately	Tuning
Pn401	Torque Reference Filter Time Constant		Speed Position	Torque	Classification
	Setting Range	Setting Unit	Factory Setting	When Enabled	
	0 to 65535	0.01 ms	100	Immediately	Tuning
Pn141	Model Following Control Gain			Position	Classification
	Setting Range	Setting Unit	Factory Setting	When Enabled	
	10 to 20000	0.1/s	500	Immediately	Tuning
Pn142	Model Following Control Gain Compensation			Position	Classification
	Setting Range	Setting Unit	Factory Setting	When Enabled	
	500 to 2000	0.1%	1000	Immediately	Tuning
Pn121	Friction Compensation Gain			Speed Position	Classification
	Setting Range	Setting Unit	Factory Setting	When Enabled	
	10 to 1000	1%	100	Immediately	Tuning
Pn104	2nd Speed Loop Gain			Speed Position	Classification
	Setting Range	Setting Unit	Factory Setting	When Enabled	
	10 to 20000	0.1 Hz	400	Immediately	Tuning

(cont'd)

Pn105	2nd Speed Loop Integral Time Constant			Speed Position	Classification
	Setting Range	Setting Unit	Factory Setting	When Enabled	
	15 to 51200	0.01 ms	2000	Immediately	Tuning
Pn106	2nd Position Loop Gain			Position	Classification
	Setting Range	Setting Unit	Factory Setting	When Enabled	
	10 to 20000	0.1/s	400	Immediately	Tuning
Pn412	1st Step 2nd Torque Reference Filter Time Constant		Speed Position	Torque	Classification
	Setting Range	Setting Unit	Factory Setting	When Enabled	
	0 to 65535	0.01 ms	100	Immediately	Tuning
Pn148	2nd Model Following Control Gain			Position	Classification
	Setting Range	Setting Unit	Factory Setting	When Enabled	
	10 to 20000	0.1/s	500	Immediately	Tuning
Pn149	2nd Model Following Control Gain Compensation			Position	Classification
	Setting Range	Setting Unit	Factory Setting	When Enabled	
	500 to 2000	0.1%	1000	Immediately	Tuning
Pn122	2nd Gain for Friction Compensation			Speed Position	Classification
	Setting Range	Setting Unit	Factory Setting	When Enabled	
	10 to 1000	1%	100	Immediately	Tuning

(5) Parameters for Automatic Gain Switching

Pn131	Gain Switching Time 1			Position	Classification
	Setting Range	Setting Unit	Factory Setting	When Enabled	
	0 to 65535	1 ms	0	Immediately	Tuning
Pn132	Gain Switching Time 2			Position	Classification
	Setting Range	Setting Unit	Factory Setting	When Enabled	
	0 to 65535	1 ms	0	Immediately	Tuning
Pn135	Gain Switching Waiting Time 1			Position	Classification
	Setting Range	Setting Unit	Factory Setting	When Enabled	
	0 to 65535	1 ms	0	Immediately	Tuning
Pn136	Gain Switching Waiting Time 2			Position	Classification
	Setting Range	Setting Unit	Factory Setting	When Enabled	
	0 to 65535	1 ms	0	Immediately	Tuning

(6) Related Monitor

Monitor No. (Un)	Name	Value	Remarks
Un014	Effective gain monitor	1	For gain setting 1
		2	For gain setting 2

Note: When using the tuning-less function, gain setting 1 is enabled.

Parameter No.	Analog Monitor	Name	Output Value	Remarks
Pn006 Pn007	n.□□0B	Effective gain monitor	1 V	Gain setting 1 is enabled.
			2 V	Gain setting 2 is enabled.

5.8.2 Manual Adjustment of Friction Compensation

Friction compensation rectifies the viscous friction change and regular load change.

The friction compensation function can be automatically adjusted with advanced autotuning (Fn201), advanced autotuning by reference input (Fn202), or one-parameter tuning (Fn203). This section describes the steps to follow if manual adjustment is required.

(1) Required Parameter Settings

The following parameter settings are required to use friction compensation.

Parameter		Function	When Enabled	Classification
Pn408	n.0□□□ [Factory setting]	Does not use friction compensation.	Immediately	Setup
	n.1□□□	Uses friction compensation.		

Pn121	Friction Compensation Gain		Speed	Position	Classification
	Setting Range	Setting Unit	Factory Setting	When Enabled	
	10 to 1000	1%	100	Immediately	Tuning
Pn123	Friction Compensation Coefficient		Speed	Position	Classification
	Setting Range	Setting Unit	Factory Setting	When Enabled	
	0 to 100	1%	0	Immediately	Tuning
Pn124	Friction Compensation Frequency Correction		Speed	Position	Classification
	Setting Range	Setting Unit	Factory Setting	When Enabled	
	-10000 to 10000	0.1 Hz	0	Immediately	Tuning
Pn125	Friction Compensation Gain Correction		Speed	Position	Classification
	Setting Range	Setting Unit	Factory Setting	When Enabled	
	1 to 1000	1%	100	Immediately	Tuning

(2) Operating Procedure for Friction Compensation

The following procedure is used for friction compensation.

⚠ CAUTION

- Before using friction compensation, set the moment of inertia ratio (Pn103) as accurately as possible. If the wrong moment of inertia ratio is set, vibration may result.

Step	Operation
1	Set the following parameters for friction compensation to the factory setting as follows. Friction compensation gain (Pn121): 100 Friction compensation coefficient (Pn123): 0 Friction compensation frequency correction (Pn124): 0 Friction compensation gain correction (Pn125): 100 Note: Always use the factory-set values for friction compensation frequency correction (Pn124) and friction compensation gain correction (Pn125).
2	To check the effect of friction compensation, gradually increase the friction compensation coefficient (Pn123). Note: Usually, set the friction compensation coefficient value to 95% or less. If the effect is insufficient, increase the friction compensation gain (Pn121) by 10% increments until it stops vibrating. Effect of Parameters for Adjustment Pn121: Friction Compensation Gain This parameter sets the responsiveness for external disturbance. The higher the set value is, the better the responsiveness will be. If the equipment has a resonance frequency, however, vibration may result if the set value is excessively high. Pn123: Friction Compensation Coefficient This parameter sets the effect of friction compensation. The higher the set value is, the more effective friction compensation will be. If the set value is excessively high, however, the vibration will occur easily. Usually, set the value to 95% or less.
3	Effect of Adjustment The following graph shows the responsiveness with and without proper adjustment. 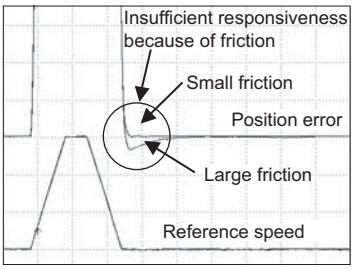 Without friction compensation 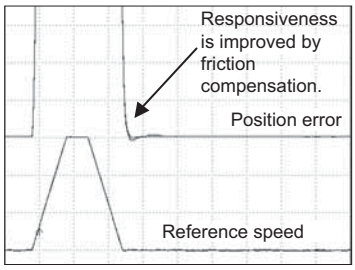 With friction compensation

5.8.3 Current Control Mode Selection Function

This function reduces high-frequency noises while the servomotor is being stopped. This function is enabled by default and set to be effective under different application conditions. Set Pn009.1 = 1 to use this function.

This function can be used with the following SERVOPACKs.

Input Voltage	SERVOPACK Model SGDV-
200 V	120A, 180A, 200A, 330A, 470A, 550A, 590A, 780A
400 V	3R5D, 5R4D, 8R4D, 120D, 170D, 210D, 260D, 280D, 370D

Parameter		Meaning	When Enabled	Classification
Pn009	n. □□0□	Selects the current control mode 1.	After restart	Tuning
	n. □□1□ [Factory setting]	Selects the current control mode 2 (low noise).		

IMPORTANT

- If current control mode 2 is selected, the load ratio may increase while the servomotor is being stopped.

5.8.4 Current Gain Level Setting

This function reduces noises by adjusting the parameter value for current control inside the SERVOPACK according to the speed loop gain (Pn100). The noise level can be reduced by reducing the current gain level (Pn13D) from its factory setting of 2000% (disabled). If the set value of Pn13D is decreased, the level of noise will be lowered, but the response characteristics of the SERVOPACK will also be degraded. Adjust the current gain level within the allowable range at which SERVOPACK response characteristics can be secured.

Pn13D	Current Gain Level		Speed Position		Classification
	Setting Range	Setting Unit	Factory Setting	When Enabled	
	100 to 2000	1%	2000	Immediately	Tuning

IMPORTANT

- If the parameter setting of the current gain level is changed, the responses characteristics of the speed loop will also change. The SERVOPACK must, therefore, be readjusted again.

5.8.5 Speed Detection Method Selection

This function can ensure smooth movement of the servomotor while the servomotor is running. Set the value of Pn009.2 to 1 and select speed detection 2 to smooth the movement of the servomotor while the servomotor is running.

Parameter		Meaning	When Enabled	Classification
Pn009	n. □0□□ [Factory setting]	Selects speed detection 1.	After restart	Tuning
	n. □1□□	Selects speed detection 2.		

IMPORTANT

- If the speed detection method is changed, the response characteristics of the speed loop will change and the SERVOPACK must be readjusted again.

5.8.6 Backlash Compensation Function

(1) Overview

When driving a machine with backlash, there will be a deviation between the travel distance in the position reference that is managed by the host controller and the travel distance of the actual machine. Use backlash compensation function to add the backlash compensation value to the position reference and use the result to drive the servomotor. This means that the travel distance of the actual machine will be the same as the travel distance in the host controller.

Note 1. This function is supported only for position control.
2. Software version 0023 or higher is required to use this function. The software version can be confirmed in Fn012. For details, refer to *6.14 Software Version Display (Fn012)*.

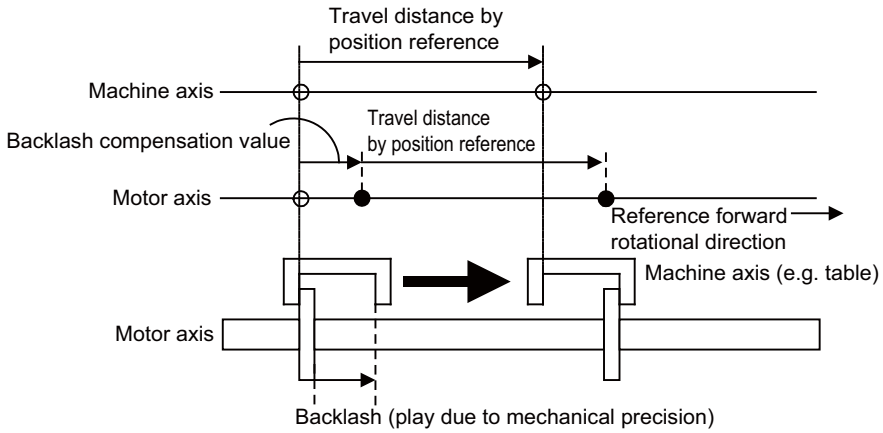

(2) Related Parameter

Set the following parameter to use backlash compensation.

■ Backlash Compensation Direction

Set the direction in which to apply backlash compensation.

Parameter		Function	When Enabled	Classification
Pn230	n. □□□0 [Factory setting]	Compensates with a reference in the forward direction.	After restart	Setup
	n. □□□1	Compensates with a reference in the reverse direction.		

■ Backlash Compensation Value

Set the amount of backlash compensation to add to the position reference.
The amount is set in increments of 0.1 reference unit. However, when the amount is converted to encoder pulses, it is rounded off at the decimal point.

Example: If Pn231 is set to 6,553.6 [reference unit] and the electronic gear ratio (Pn20E/Pn210) is set to 4/1, then the pulse equivalent is 6,553.6 × 4 = 26,214.4 [pulses].
⇒The backlash compensation value will be 26,214 encoder pulses.

Pn231	Backlash compensation value			Position	Classification
	Setting Range	Setting Unit	Factory Setting	When Enabled	
	-500000 to 500000	0.1 reference unit	0	Immediately	Setup

IMPORTANT

- The backlash compensation value is restricted by the following formula. The specified compensation is not performed if this condition is not met.

$$Pn231 \leq \frac{Pn210}{Pn20E} \times \frac{\text{Maximum motor speed [min}^{-1}\text{]}}{60} \times \text{Encoder resolution}^{*} \times 0.00025$$

* For details on encoder resolution, refer to *8.3.5 Electronic Gear*. With fully-closed loop control, substitute the number of external encoder pulses per motor revolution for "encoder resolution" in the formula above.

Example 1:

Assuming Pn20E = 4, Pn210 = 1, maximum motor speed = 6000 [min^{-1}],
encoder resolution = 1048576 (20 bits):
1/4 × 6000/60 × 1048576 × 0.00025 = 6553.6 [reference units]
⇒The upper limit for the backlash compensation is 6553.6 [reference units].

Example 2:

When using the conditions Pn20E = 4, Pn210 = 1, maximum motor speed = 6000 [min^{-1}], external encoder pitch count (Pn20A) = 500, JZDP-D00□-000 (signal resolution: 1/256):
1/4 × 6000/60 × (500 × 256) × 0.00025 = 800.0 [reference units]
⇒ The upper limit for the backlash compensation is 800.0 [reference units].

- Do not exceed the upper limit of the backlash compensation value. The upper limit of the backlash compensation value can be confirmed in Un031.

■ Backlash Compensation Time Constant

Set a time constant for a first order lag filter to use when adding the backlash compensation value (Pn231) to the position reference.
If you set Pn233 to 0, the first order lag filter is disabled.

Pn233	Backlash compensation time constant			Position	Classification
	Setting Range	Setting Unit	Factory Setting	When Enabled	
	0 to 65535	0.01 ms	0	Immediately	Setup

Note: Changes to the set value are applied when there is no position reference input and the servomotor is stopped. The current operation is not affected if the set value is changed during servomotor operation.

(3) Related Monitor

The following monitoring parameters provide information on backlash compensation.

Un No.	Displayed Information	Unit
Un030	The current backlash compensation value	0.1 reference unit
Un031	Backlash compensation setting limit value	0.1 reference unit

(4) Compensation Operation

This section describes the operation that is performed for backlash compensation.

Note: The following figures are for when backlash compensation is applied for references in the forward direction (Pn230.0 = 0). The following monitoring information is provided in the figures: TPOS (target position in the reference coordinate system), POS (reference position in the reference coordinate system), and APOS (feedback position in the machine coordinate system). The monitoring information includes the feedback position in machine coordinate system (APOS) and other feedback information. The backlash compensation value is subtracted from the feedback positions in the monitoring information, so it is not necessary for the host controller to consider the backlash compensation value.

⚠ CAUTION

- The encoder output pulse will output the number of encoder pulses for which driving was actually performed, including the backlash compensation value. If using the encoder output pulse for position feedback at the host controller, must consider the backlash compensation value.

■ When Servo is ON

The backlash compensation value (Pn231) is added in the compensation direction when the servo is ON (i.e., the servomotor is powered) and a reference is input in the same direction as the backlash compensation direction (Pn230.0). If there is a reference input in the direction opposite to the backlash compensation direction, the backlash compensation value is not added (i.e., backlash compensation is not performed).

The relationship between APOS and the servomotor shaft position is as follows:

- If a reference is input in the compensation direction: APOS = Motor shaft position - Pn231
- If a reference is input in the direction opposite to the compensation direction: APOS = Motor shaft position

The following figure shows driving the servomotor in the forward direction from target position TPOS0 to TPOS1 and then to TPOS2, and then returning from TPOS2 to TPOS1 and then to TPOS0.

Backlash compensation is applied when moving from TPOS0 to TPOS1, but not when moving from TPOS2 to TPOS1.

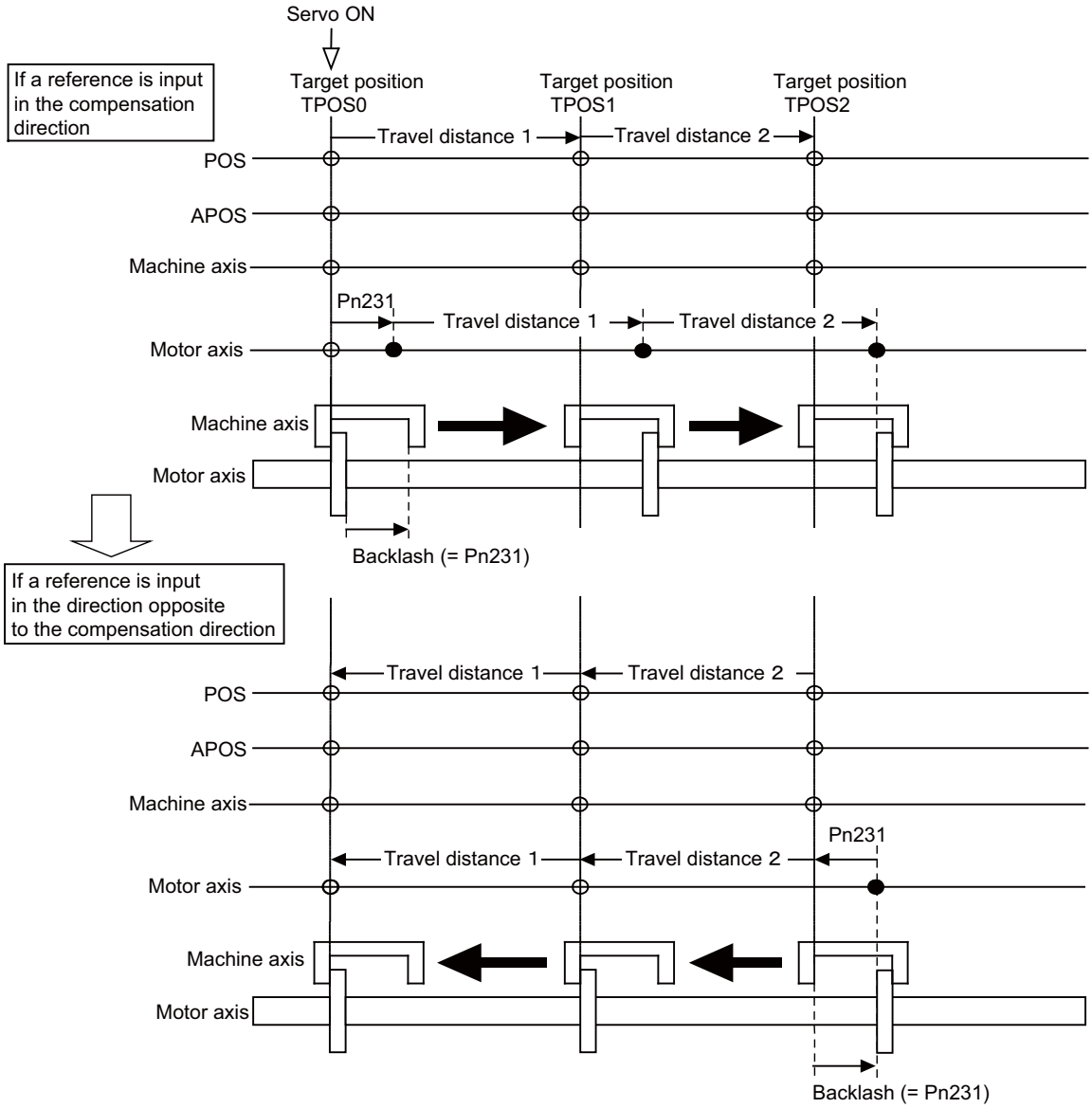

■ When Servo is OFF

Backlash compensation is not applied when the servo is OFF (i.e., when the servomotor is not powered). Therefore, the reference position POS moves by only the backlash compensation value.

The relationship between APOS and the servomotor shaft position is as follows:

• When servo is OFF: APOS = Servomotor shaft position

The following figure shows what happens when the servo is turned OFF after driving the servomotor in the forward direction from target position TPOS0 to TPOS1. Backlash compensation is not applied when the servo is OFF (i.e., the SERVOPACK manages the position data so that APOS and POS are the same).

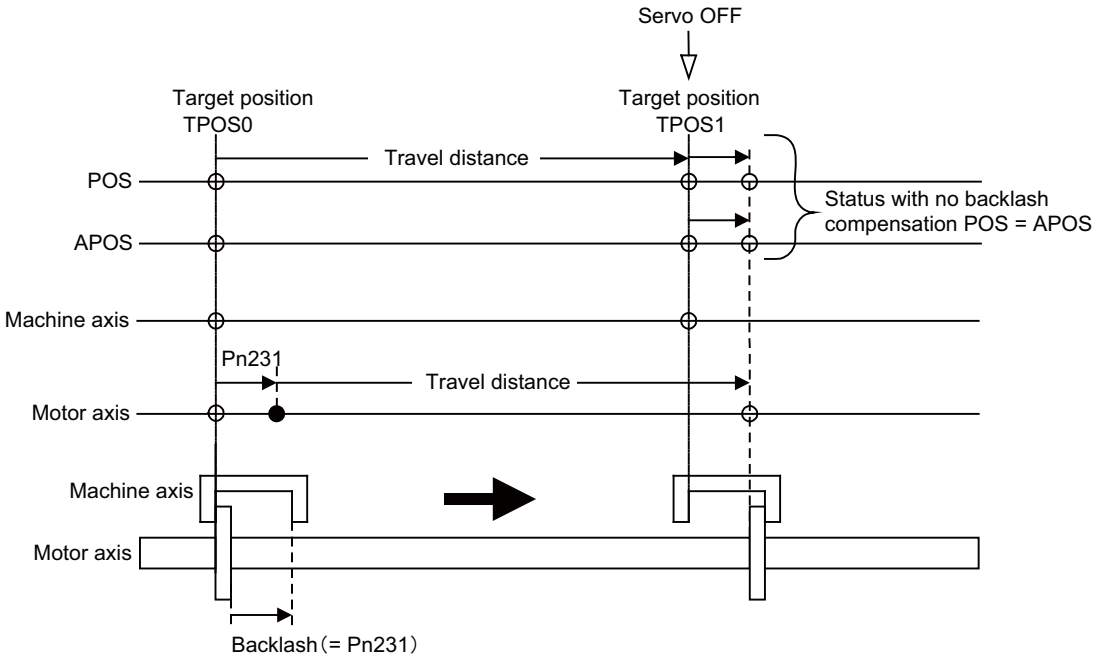

■ When There is Overtravel

When there is overtravel (i.e., when driving is prohibited due to an overtravel signal or software limit), the operation is the same as for ■ *When Servo is OFF*, i.e., backlash compensation is not applied.

■ When Control is Changed

Backlash compensation is performed only for position control.
Backlash compensation is not applied if changing from position control to any other type of control.
Backlash compensation is applied in the same way as ■ *When Servo is ON* if changing from any other type of control to position control.

■ When Safety Module Active Mode is Used

During an operation in active mode function, the operation is the same as for ■ *When Servo is OFF*, i.e., backlash compensation is not applied.

(5) Monitor Functions (Un Monitoring)

Un No.	Displayed Information	Unit	Specification
Un007	Input reference speed	min^{-1}	Indicates the input reference speed before backlash compensation.
Un008	Position error amount	Reference unit	Displays the position error with respect to the position reference after backlash compensation.
Un00C	Input reference counter	Reference unit	Displays the input reference counter before backlash compensation.
Un00D	Feedback pulse counter	Encoder pulse	Displays the pulse count of the actually driven motor encoder.
Un00E	Fully-closed feedback pulse counter	External encoder resolution	Displays the pulse count of the actually driven external encoder.
Un013	Feedback pulse counter	Reference unit	Displays the pulse count of the actually driven encoder in reference units.

(6) MECHATROLINK Monitor Information

This section describes the information that is set for the MECHATROLINK monitoring information (Monitor 1, Monitor 2, Monitor 3, and Monitor 4) and the backlash compensation operation.

Monitor Code	Designation	Meaning	Unit	Remarks
0	POS	Reference position in the reference coordinate system (after the position reference filter)	Reference unit	–
1	MPOS	Reference position	Reference unit	–
2	PERR	Position error	Reference unit	–
3	APOS	Feedback position in the machine coordinate system	Reference unit	Feedback position with the backlash compensation subtracted
4	LPOS	Feedback latch position in the machine coordinate system	Reference unit	Feedback position with the backlash compensation subtracted
5	IPOS	Reference position in the reference coordinate system (before the position reference filter)	Reference unit	–
6	TPOS	Target position in the reference coordinate system	Reference unit	–
E	OMN1	Option monitor 1 (selected with Pn824)	–	–
F	OMN2	Option monitor 2 (selected with Pn825)	–	–

Parameters		Monitor Information	Output Unit	Remarks
Pn824 Pn825	0003H	Position error (lower 32 bits)	Reference unit	–
	0004H	Position error (upper 32 bits)	Reference unit	–
	000AH	Encoder count (lower 32 bits)	Reference unit	Count value of the actually driven motor encoder
	000BH	Encoder count (upper 32 bits)	Reference unit	
	000CH	FPG count (lower 32 bits)	Reference unit	Count value of the actually driven external encoder
	000DH	FPG count (upper 32 bits)	Reference unit	
	0017H	Un007: Input reference speed	min^{-1}	Same as monitor display Un007
	0018H	Un008: Position error amount	Reference unit	Same as monitor display Un008
	001CH	Un00C: Input reference counter	Reference unit	Same as monitor display Un00C
	001DH	Un00D: Feedback pulse counter	Encoder pulse	Same as monitor display Un00D
	001EH	Un00E: Fully-closed feedback pulse counter	External encoder resolution	Same as monitor display Un00E
	0080H	Previous value of latched feedback position (LPOS)	Encoder pulse	Feedback position with the backlash compensation subtracted

■ Related Monitoring Diagrams

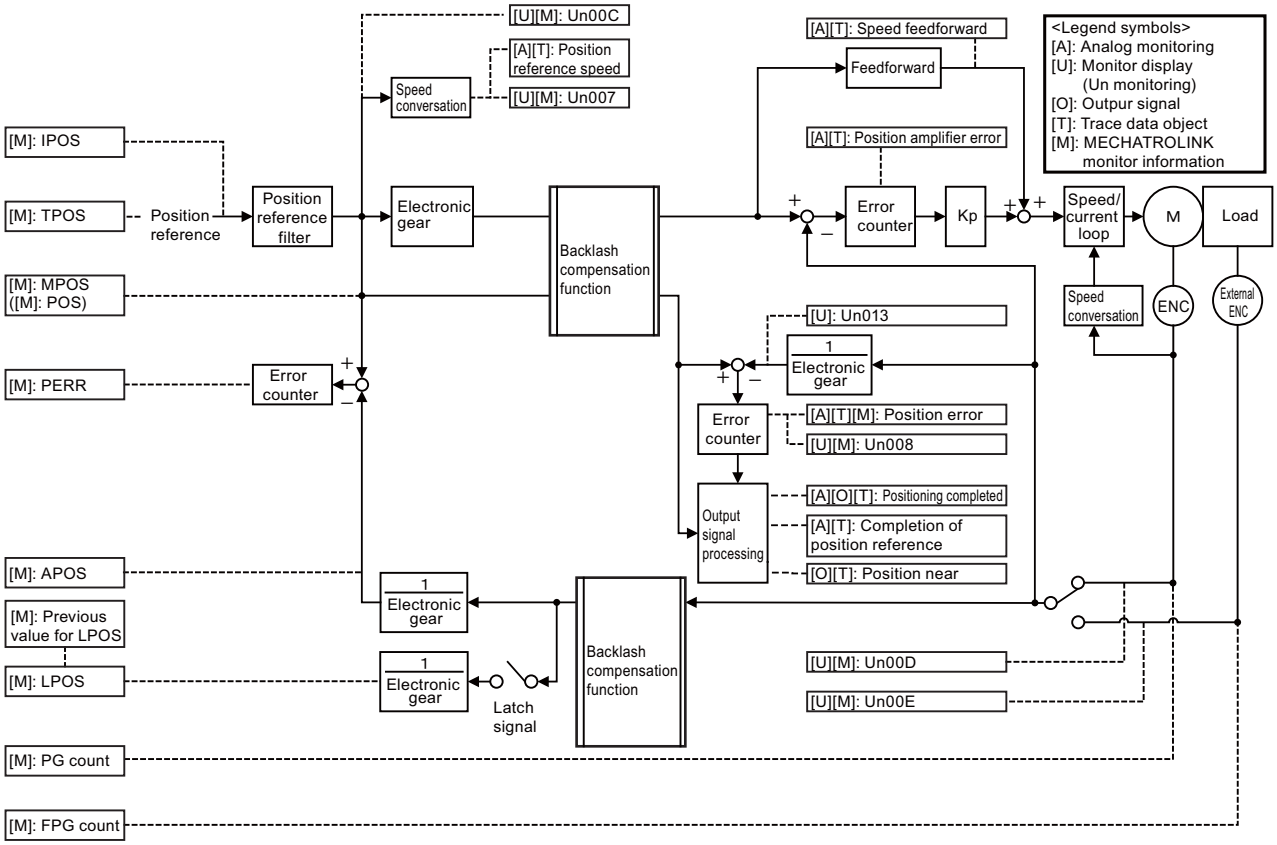

5.9 Compatible Adjustment Function

The Σ-V series SERVOPACKs have adjustment functions as explained in sections *5.1* to *5.8* to make machine adjustments.
This section explains compatible functions provided by earlier models, such as the Σ-III Series SERVOPACK.

5.9.1 Feedforward Reference

This function applies feedforward compensation to position control and shortens positioning time.

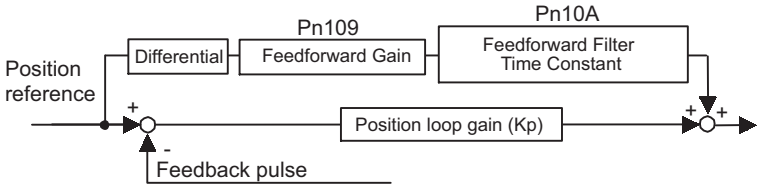

Pn109	Feedforward Gain			Position	Classification
	Setting Range	Setting Unit	Factory Setting	When Enabled	
	0 to 100	1%	0	Immediately	Tuning
Pn10A	Feedforward Filter Time Constant			Position	Classification
	Setting Range	Setting Unit	Factory Setting	When Enabled	
	0 to 6400	0.01 ms	0	Immediately	Tuning

Note: Too high value may cause the machine to vibrate. For ordinary machines, set 80% or less in this parameter.

5.9.2 Mode Switch (P/PI Switching)

The mode switch automatically switches between proportional and PI control. Set the switching condition with Pn10B.0 and set the level of detection points with Pn10C, Pn10D, Pn10E, and Pn10F.

Overshooting caused by acceleration and deceleration can be suppressed and the settling time can be reduced by setting the switching condition and detection points.

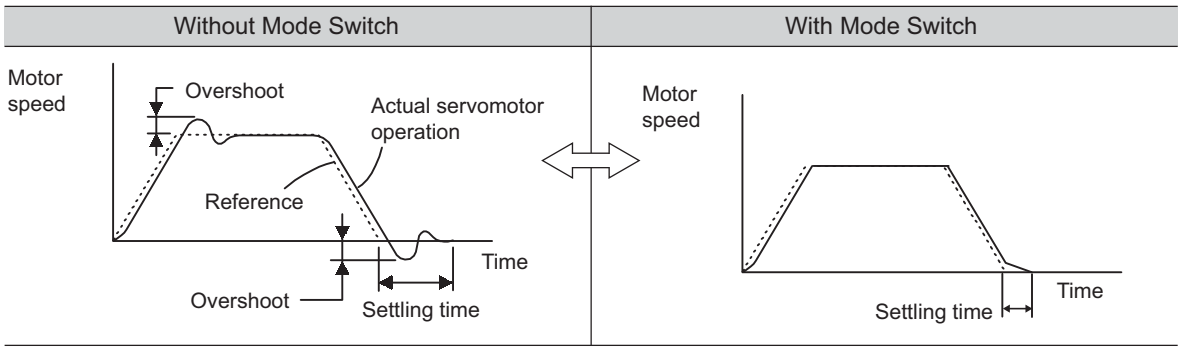

(1) Related Parameters

Select the switching condition of the mode switch with Pn10B.0.

Parameter		Mode Switch Selection	Parameter Containing Detection Point Setting	When Enabled	Classification
Pn10B	n.□□□0 [Factory setting]	Uses an internal torque reference level for the switching conditions.	Pn10C	Immediately	Setup
	n.□□□1	Uses a speed reference level for the switching conditions.	Pn10D		
	n.□□□2	Uses an acceleration level for the switching conditions.	Pn10E		
	n.□□□3	Uses a position error level for the switching conditions.	Pn10F		
	n.□□□4	Does not use mode switch function.	–		

■ Parameters to Set the Level of Detection Points

Pn10C	Mode Switch (Torque Reference)		Speed	Position	Classification
	Setting Range	Setting Unit	Factory Setting	When Enabled	
	0 to 800	1%	200	Immediately	Tuning
Pn10D	Mode Switch (Speed Reference)		Speed	Position	Classification
	Setting Range	Setting Unit	Factory Setting	When Enabled	
	0 to 10000	1 min^{-1}	0	Immediately	Tuning
Pn10E	Mode Switch (Acceleration)		Speed	Position	Classification
	Setting Range	Setting Unit	Factory Setting	When Enabled	
	0 to 30000	1 min^{-1}/s	0	Immediately	Tuning
Pn10F	Mode Switch (Position Error)			Position	Classification
	Setting Range	Setting Unit	Factory Setting	When Enabled	
	0 to 10000	1 reference unit	0	Immediately	Tuning

(2) Operating Examples for Different Switching Conditions

■ Using the Torque Reference [Factory Setting]

With this setting, the speed loop is switched to P control when the value of torque reference input exceeds the torque set in Pn10C. The factory setting for the torque reference detection point is 200% of the rated torque.

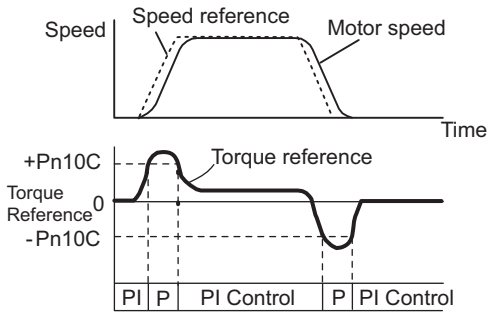

■ Using the Speed Reference

With this setting, the speed loop is switched to P control when the value of speed reference input exceeds the speed set in Pn10D.

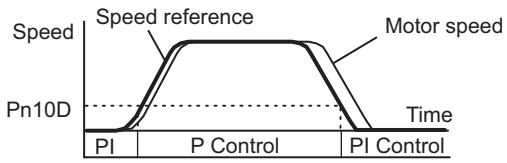

■ Using Acceleration

With this setting, the speed loop is switched to P control when the speed reference exceeds the acceleration set in Pn10E.

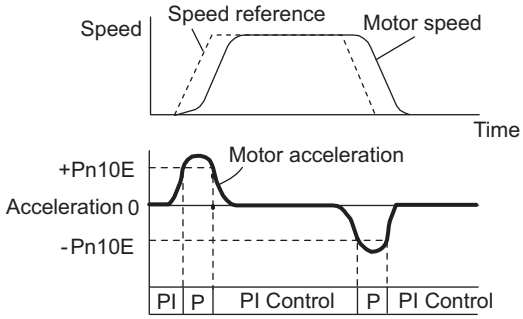

■ Using the Position Error

With this setting, the speed loop is switched to P control when the position error exceeds the value set in Pn10F.

This setting is effective with position control only.

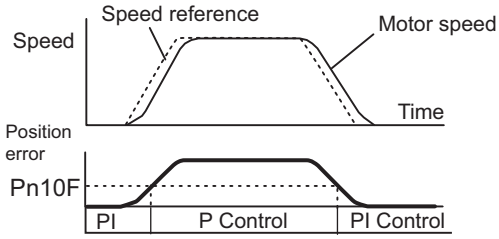

5.9.3 Torque Reference Filter

As shown in the following diagram, the torque reference filter contains first order lag filter and notch filters arrayed in series, and each filter operates independently. The notch filters can be enabled and disabled with the Pn408.

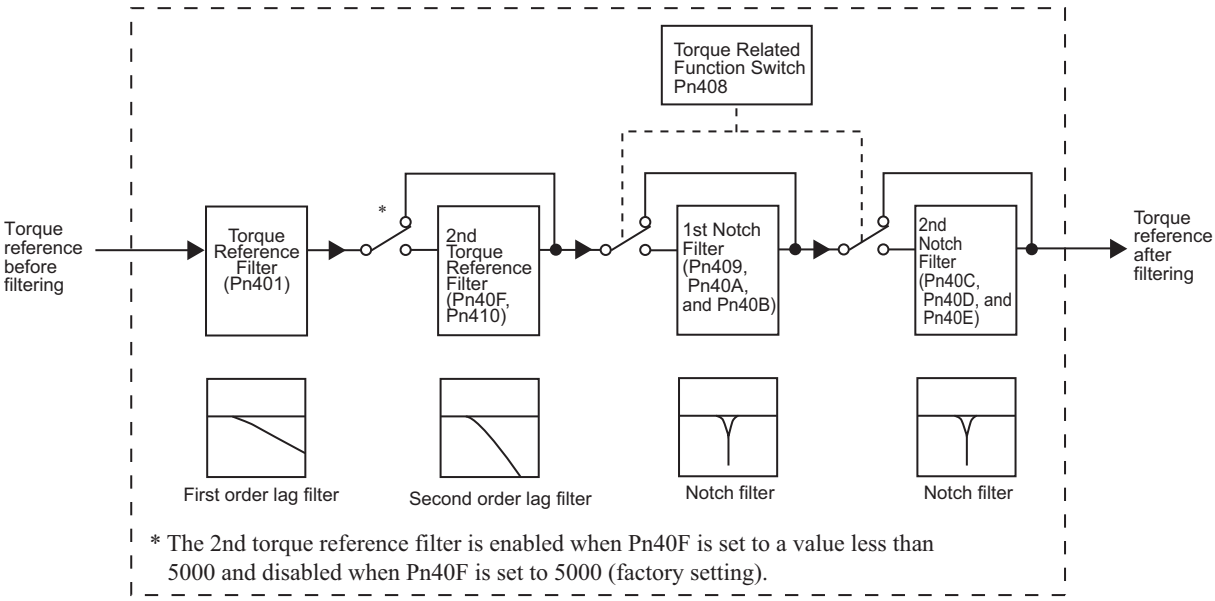

(1) Torque Reference Filter

If you suspect that machine vibration is being caused by the servo drive, try adjusting the filter time constants with Pn401. This may stop the vibration. The lower the value, the better the response will be, but there may be a limit that depends on the machine conditions.

Pn401	Torque Reference Filter Time Constant		Speed Position Torque		Classification
	Setting Range	Setting Unit	Factory Setting	When Enabled	
	0 to 65535	0.01 ms	100	Immediately	Tuning

■ Torque Reference Filter Setting Guide

Use the speed loop gain (Pn100 [Hz]) and the torque filter time constant (Pn401 [ms]) to set the torque reference filter.

Adjusted value for stable control: Pn401 [ms] ≤ 1000/ (2π × Pn100 [Hz] × 4)
Critical gains: Pn401 [ms] < 1000/ (2π × Pn100 [Hz] × 1)

Pn40F	2nd Step 2nd Torque Reference Filter Frequency		Speed Position Torque		Classification
	Setting Range	Setting Unit	Factory Setting	When Enabled	
	100 to 5000	1 Hz	5000*	Immediately	Tuning
Pn410	2nd Step 2nd Torque Reference Filter Q Value		Speed Position Torque		Classification
	Setting Range	Setting Unit	Factory Setting	When Enabled	
	50 to 100	0.01	50	Immediately	Tuning

* The filter is disabled if 5000 is set.

(2) Notch Filter

The notch filter can eliminate specific frequency elements generated by the vibration of sources such as resonance of the shaft of a ball screw. The notch filter puts a notch in the gain curve at the specific vibration frequency. The frequency characteristics near the notch can be reduced or removed with this filter. A higher Q value produces a sharper notch and phase delay.

Q value = 0.7	Q value = 1.0
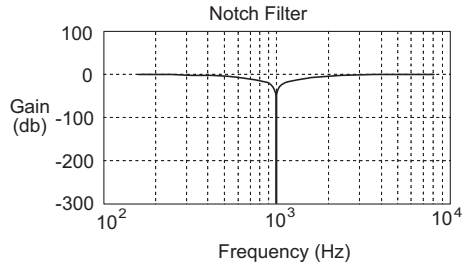	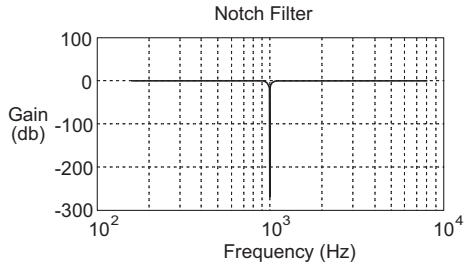
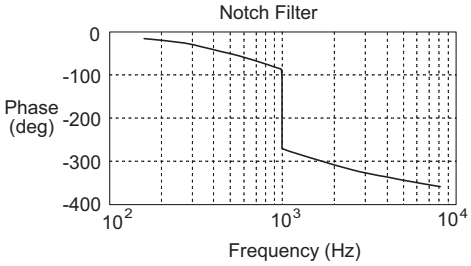	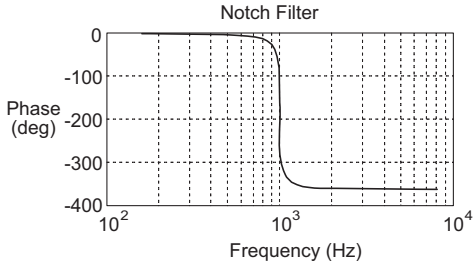

The notch filter can be enabled or disabled with Pn408.

Parameter		Meaning	When Enabled	Classification
Pn408	n.□□□0 [Factory setting]	Disables 1st notch filter.	Immediately	Setup
	n.□□□1	Enables 1st notch filter.		
	n.□0□□ [Factory setting]	Disables 2nd notch filter.		
	n.□1□□	Enables 2nd notch filter.		

Set the machine's vibration frequency as a parameter of the notch filter.

Pn409	1st Notch Filter Frequency		Speed Position Torque		Classification
	Setting Range	Setting Unit	Factory Setting	When Enabled	
	50 to 5000	1 Hz	5000	Immediately	Tuning
Pn40A	1st Notch Filter Q Value		Speed Position Torque		Classification
	Setting Range	Setting Unit	Factory Setting	When Enabled	
	50 to 1000	0.01	70	Immediately	Tuning
Pn40B	1st Notch Filter Depth		Speed Position Torque		Classification
	Setting Range	Setting Unit	Factory Setting	When Enabled	
	0 to 1000	0.001	0	Immediately	Tuning
Pn40C	2nd Notch Filter Frequency		Speed Position Torque		Classification
	Setting Range	Setting Unit	Factory Setting	When Enabled	
	50 to 5000	1 Hz	5000	Immediately	Tuning

(cont'd)

Pn40D	2nd Notch Filter Q Value		Speed Position Torque		Classification
	Setting Range	Setting Unit	Factory Setting	When Enabled	
	50 to 1000	0.01	70	Immediately	Tuning
Pn40E	2nd Notch Filter Depth		Speed Position Torque		Classification
	Setting Range	Setting Unit	Factory Setting	When Enabled	
	0 to 1000	0.001	0	Immediately	Tuning

IMPORTANT

- Sufficient precautions must be taken when setting the notch filter frequencies. Do not set the notch filter frequencies (Pn409 or Pn40C) that is close to the speed loop's response frequency. Set the frequencies at least four times higher than the speed loop's response frequency. Setting the notch filter frequency too close to the response frequency may cause vibration and damage the machine.
- Change the notch filter frequencies (Pn409 or Pn40C) only when the servomotor is stopped. Vibration may occur if the notch filter frequency is changed when the servomotor is rotating.

5.9.4 Position Integral

The position integral is the integral function of the position loop. It is used for the electronic cams and electronic shafts when using the SERVOPACK with YASKAWA MP900/2000 Machine Controllers.

Pn11F	Position Integral Time Constant			Position	Classification
	Setting Range	Setting Unit	Factory Setting	When Enabled	
	0 to 50000	0.1 ms	0	Immediately	Tuning

6

Utility Functions (Fn□□□)

6.1 List of Utility Functions 6-2
6.2 Alarm History Display (Fn000) 6-3
6.3 JOG Operation (Fn002) 6-4
6.4 Origin Search (Fn003) 6-6
6.5 Program JOG Operation (Fn004) 6-8
6.6 Initializing Parameter Settings (Fn005) 6-13
6.7 Clearing Alarm History (Fn006) 6-14
6.8 Offset Adjustment of Analog Monitor Output (Fn00C) 6-15
6.9 Gain Adjustment of Analog Monitor Output (Fn00D) 6-17
6.10 Automatic Offset-Signal Adjustment of the Motor Current Detection Signal (Fn00E) 6-19
6.11 Manual Offset-Signal Adjustment of the Motor Current Detection Signal (Fn00F) 6-20
6.12 Write Prohibited Setting (Fn010) 6-22
6.13 Servomotor Model Display (Fn011) 6-24
6.14 Software Version Display (Fn012) 6-25
6.15 Resetting Configuration Errors in Option Modules (Fn014) 6-26
6.16 Vibration Detection Level Initialization (Fn01B) 6-27
6.17 Display of SERVOPACK and Servomotor ID (Fn01E) 6-29
6.18 Display of Servomotor ID in Feedback Option Module (Fn01F) 6-31
6.19 Origin Setting (Fn020) 6-33
6.20 Software Reset (Fn030) 6-34
6.21 EasyFFT (Fn206) 6-35
6.22 Online Vibration Monitor (Fn207) 6-39

6.1 List of Utility Functions

Utility functions are used to execute the functions related to servomotor operation and adjustment.
Each utility function has a number starting with Fn.

The following table lists the utility functions and reference section.

Function No.	Function	Reference Section
Fn000	Alarm history display	6.2
Fn002	JOG operation	6.3
Fn003	Origin search	6.4
Fn004	Program JOG operation	6.5
Fn005	Initializing parameter settings	6.6
Fn006	Clearing alarm history	6.7
Fn008	Absolute encoder multiturn reset and encoder alarm reset	4.7.4
Fn00C	Offset adjustment of analog monitor output	6.8
Fn00D	Gain adjustment of analog monitor output	6.9
Fn00E	Automatic offset-signal adjustment of the motor current detection signal	6.10
Fn00F	Manual offset-signal adjustment of the motor current detection signal	6.11
Fn010	Write prohibited setting	6.12
Fn011	Servomotor model display	6.13
Fn012	Software version display	6.14
Fn013	Multiturn limit value setting change when a multiturn limit disagreement alarm occurs	4.7.7
Fn014	Resetting configuration error in option modules	6.15
Fn01B	Vibration detection level initialization	6.16
Fn01E	Display of SERVOPACK and servomotor ID	6.17
Fn01F	Display of servomotor ID in feedback option module	6.18
Fn020	Origin setting	6.19
Fn030	Software reset	6.20
Fn200	Tuning-less levels setting	5.2.2
Fn201	Advanced autotuning	5.3.2
Fn202	Advanced autotuning by reference	5.4.2
Fn203	One-parameter tuning	5.5.2
Fn204	Anti-resonance control adjustment function	5.6.2
Fn205	Vibration suppression function	5.7.2
Fn206	EasyFFT	6.21
Fn207	Online vibration monitor	6.22

Note: Execute the utility function with either a digital operator or SigmaWin+. If they are used together, "no_oP" or "NO-OP" will be displayed when the utility function is executed.

6.2 Alarm History Display (Fn000)

This function displays the last ten alarms that have occurred in the SERVOPACK.
The latest ten alarm numbers and time stamps* can be checked.

* Time Stamps

A function that measures the ON times of the control power supply and main circuit power supply in 100-ms units and displays the total operating time when an alarm occurs. The time stamp operates around the clock for approximately 13 years.

<Example of Time Stamps>

If 36000 is displayed,
3600000 [ms] = 3600 [s] = 60 [min] = 1 [h]
Therefore, the total number of operating hours is 1 hour.

(1) Preparation

There are no tasks that must be performed before displaying the alarm history.

(2) Operating Procedure

Use the following procedure.

Step	Display after Operation	Keys	Operation
1	BB –FUNCTION– Fn207:V–Monitor Fn000:Alm History Fn002:JOG Fn003:Z–Search	MODE/SET ∧ ∨	Press the MODE/SET Key to view the main menu for the utility function. Use the ∧ or ∨ Key to move through the list and select Fn000.
2	A.D00 –ALARM– 0:D00 00001207196 1:720 00000032651 2:511 00000009043 3:–––	DATA	Press the DATA Key. The display changes to the Fn000 execution display.
3	A.D00 –ALARM– 1:720 00000032651 2:511 00000009043 3:––– 4:––– Time stamp Alarm no. Alarm history no. 0: Latest 9: Oldest	∧ ∨	Press the ∧ or ∨ Key to scroll through the alarm history. The alarm history can be viewed.
4	BB –FUNCTION– Fn207:V–Monitor Fn000:Alm History Fn002:JOG Fn003:Z–Search	MODE/SET	Press the MODE/SET Key. The display returns to the main menu of the utility function.

Note:

- If the same alarm occurs after more than one hour, the alarm will be saved. If it occurs in less than one hour, it will not be saved.
- The display "□.---" means no alarm occurs.
- Delete the alarm history using the parameter Fn006. The alarm history is not cleared on alarm reset or when the SERVOPACK main circuit power is turned OFF.

6.3 JOG Operation (Fn002)

JOG operation is used to check the operation of the servomotor under speed control without connecting the SERVOPACK to the host controller.

⚠ CAUTION

- While the SERVOPACK is in JOG operation, the overtravel function will be disabled. Consider the operating range of the machine when performing JOG operation for the SERVOPACK.

(1) Preparation

The following conditions must be met to perform a jog operation.

- The write prohibited setting parameter (Fn010) must be set to Write permitted (P.0000).
- The main circuit power supply must be ON.
- All alarms must be cleared.
- The hardwire baseblock (HWBB) must be disabled.
- The servomotor power must be OFF.
- The JOG speed must be set considering the operating range of the machine.
  Set the jog speed in Pn304.

Pn304	Jog Speed			Speed Position Torque	Classification
	Setting Range	Setting Unit	Factory Setting	When Enabled	
	0 to 10000	1 min^{-1}*	500	Immediately	Setup

* When using an SGMCS direct drive motor, the setting unit will be automatically changed to 0.1 min^{-1}.

(2) Operating Procedure

Use the following procedure. The following example is given when the rotating direction of servomotor is set as Pn000.0=0 (Forward rotation by forward reference).

Step	Display after Operation	Keys	Operation
1	BB –FUNCTION– Fn000:Alm History Fn002:JOG Fn003:Z-Search Fn004:Program JOG	MODE/SET ∧ ∨	Press the MODE/SET Key to view the main menu for the utility function. Use the ∧ or ∨ Key to move through the list and select Fn002.
2	BB –JOG– Pn304=00500 Un000= 00000 Un002= 00000 Un00D= 0000000000	DATA	Press the DATA Key. The display changes to the Fn002 execution display.
3	BB –JOG– Pn304=00500 Un000= 00000 Un002= 00000 Un00D= 0000000000	DATA	Press the DATA Key. The cursor moves to the setting side (the right side) of Pn304 (JOG speed).
4	BB –JOG– Pn304=01000 Un000= 00000 Un002= 00000 Un00D= 0000000000	< > ∧ ∨	Press the < or > Key and the ∧ or ∨ Key to set the JOG speed (Pn304) to 1000 min^{-1}.
5	BB –JOG– Pn304=01000 Un000= 00000 Un002= 00000 Un00D= 0000000000	DATA	Press the DATA Key. The setting value is entered, and the cursor moves to the parameter number side (the left side).

(cont'd)

Step	Display after Operation	Keys	Operation
6	RUN –JOG– Pn304=01000 Un000= 00000 Un002= 00000 Un00D= 0000000000	JOG SVON	Press the JOG SVON Key. The status display changes from "BB" to "RUN", and the servomotor power turns ON.
7	RUN –JOG– Pn304=01000 Un000= 00000 Un002= 00000 Un00D= 0000000000	∧ ∨	The servomotor will rotate at the present speed set in Pn304 while the ∧ Key (for forward rotation) or ∨ Key (for reverse rotation) is pressed. Forward Reverse
8	BB –JOG– Pn304=01000 Un000= 00000 Un002= 00000 Un00D= 0000000000	JOG SVON	After having confirmed the correct motion of servomotor, press the JOG SVON Key. The status display changes from "RUN" to "BB", and the servomotor power turns OFF.
9	BB –FUNCTION– Fn000:Alm History Fn002:JOG Fn003:Z-Search Fn004:Program JOG	MODE/SET	Press the MODE/SET Key. The display returns to the main menu of the utility function.
10	To enable the change in the setting, turn the power OFF and ON again.		

6.4 Origin Search (Fn003)

The origin search is designed to position the origin pulse position of the incremental encoder (phase C) and to clamp at the position.

⚠ CAUTION

- Perform origin searches without connecting the coupling.
  The forward run prohibited (P-OT) and reverse run prohibited (N-OT) signals are not effective in origin search mode.

This function is used when the motor shaft needs to be aligned to the machine.
Motor speed at the time of execution: 60 min^{-1}
(For SGMCS direct drive motors, the speed at the time of execution is 6 min^{-1}.)

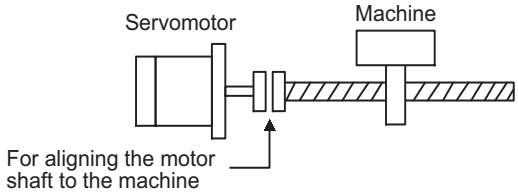

(1) Preparation

The following conditions must be met to perform the origin search.

- The write prohibited setting parameter (Fn010) must be set to Write permitted (P.0000).
- The main circuit power supply must be ON.
- All alarms must be cleared.
- The hardwire baseblock (HWBB) must be disabled.
- The servomotor power must be OFF.

(2) Operating Procedure

Use the following procedure.

<table>
<tr><th>Step</th><th>Display after Operation</th><th>Keys</th><th>Operation</th></tr>
<tr><td>1</td><td>BB –FUNCTION–
Fn002:JOG
Fn003:Z–Search
Fn004:Program JOG
Fn005:Prm Init</td><td>MODE/SET
∧ ∨</td><td>Press the MODE/SET Key to view the main menu for the utility function.
Use the ∧ or ∨ Key to move through the list and select Fn003.</td></tr>
<tr><td>2</td><td>BB –Z–Search–
Un000= 00000
Un002= 00000
Un003= 0000000774
Un00D= 0000000000</td><td>DATA</td><td>Press the DATA Key. The display changes to the Fn003 execution display.</td></tr>
<tr><td>3</td><td>RUN –Z–Search–
Un000= 00000
Un002= 00000
Un003= 0000000774
Un00D= 0000000000</td><td>JOG SVON</td><td>Press the JOG SVON Key.
The status display changes from "BB" to "RUN", and the servomotor power turns ON.
Note: If the servomotor is already at the zero position, "-Complete-" is displayed.</td></tr>
<tr><td>4</td><td>RUN –Complete–
Un000= 00000
Un002= 00000
Un003= 0000000000
Un00D= 0000001D58</td><td>∧ ∨</td><td>Pressing the ∧ Key will rotate the servomotor in the forward direction. Pressing the ∨ Key will rotate the servomotor in the reverse direction. The rotation direction of the servomotor changes according to the setting of Pn000.0 as shown in the following table.
<table>
<tr><th colspan="2">Parameter</th><th>∧ key</th><th>∨ key</th></tr>
<tr><td rowspan="2">Pn000</td><td>n.□□□0</td><td>CCW</td><td>CW</td></tr>
<tr><td>n.□□□1</td><td>CW</td><td>CCW</td></tr>
</table>
Note: Direction when viewed from the load of the servomotor.
Press the ∧ or ∨ Key until the servomotor stops. If the origin search completed normally, "-Complete-" is displayed on the right top on the screen.</td></tr>
<tr><td>5</td><td>BB –Z–Search–
Un000= 00000
Un002= 00000
Un003= 0000000000
Un00D= 0000001D58</td><td>JOG SVON</td><td>When the origin search is completed, press the JOG SVON Key.
The status display changes from "RUN" to "BB", and the servomotor turns OFF. The display "-Complete-" changes to "-Z-Search-."</td></tr>
<tr><td>6</td><td>BB –FUNCTION–
Fn002:JOG
Fn003:Z–Search
Fn004:Program JOG
Fn005:Prm Init</td><td>MODE/SET</td><td>Press the MODE/SET Key.
The display returns to the main menu of the utility function.</td></tr>
<tr><td>7</td><td colspan="3">To enable the change in the setting, turn the power OFF and ON again.</td></tr>
</table>

6.5 Program JOG Operation (Fn004)

The program JOG operation is a utility function, that allows continuous operation determined by the preset operation pattern, movement distance, movement speed, acceleration/deceleration time, waiting time, and number of times of movement.
This function can be used to move the servomotor without it having to be connected to a host controller for the machine as a trial operation in JOG operation mode. Program JOG operation can be used to confirm the operation and for simple positioning operations.

(1) Preparation

The following conditions must be met to perform the program JOG operation.

- The write prohibited setting parameter (Fn010) must be set to Write permitted (P.0000).
- The main circuit power supply must be ON.
- All alarms must be cleared.
- The hardwire baseblock (HWBB) must be disabled.
- The servomotor power must be OFF.
- The travel distance and speed must be set correctly considering the machine operation range and safe operation speed.
- There must be no overtravel.

(2) Additional Information

- The functions that are applicable for position control, such as position reference filter, can be used.
- The overtravel function is enabled in this function.

(3) Program JOG Operation Patterns

The following describes an example of program JOG operation pattern. The following example is given when the rotating direction of the servomotor is set as Pn000.0 = 0 (Forward rotation by forward reference).

Pn530.0 = 0	
(Waiting time Pn535 → Forward movement Pn531) × Number of movements Pn536	
Speed Diagram	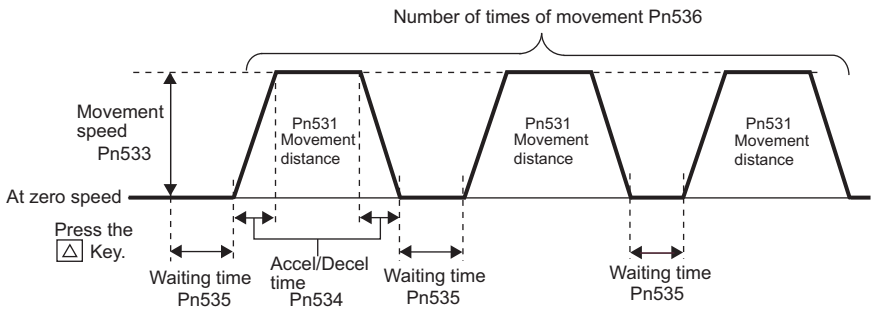
Servomotor Run Status	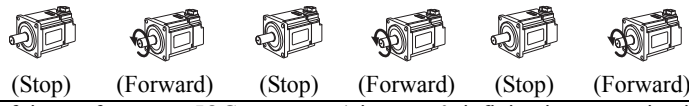

Note: When Pn536 (number of times of program JOG movement) is set to 0, infinite time operation is enabled. To stop infinite time operation, press the JOG/SVON Key to turn OFF the servomotor power.

Pn530.0 = 1	
(Waiting time Pn535 → Reverse movement Pn531) × Number of movements Pn536	
Speed Diagram	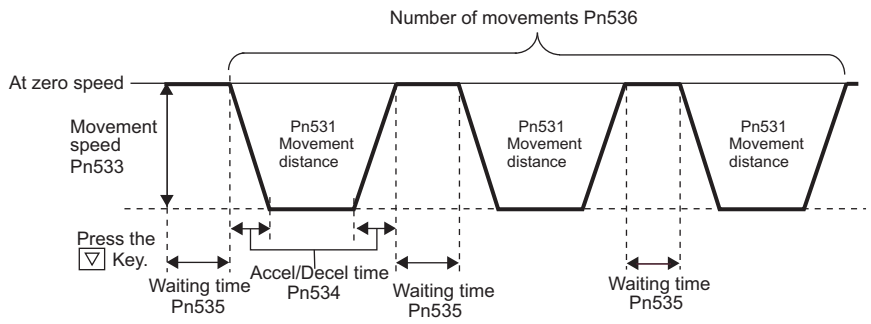
Servomotor Run Status	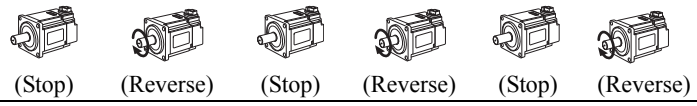

Note: When Pn536 (Number of Times of Program JOG Movement) is set to 0, infinite time operation is enabled. To stop infinite time operation, press the JOG/SVON Key to turn the servomotor power OFF.

Pn530.0 = 2	
(Waiting time Pn535 → Forward movement Pn531) × Number of movements Pn536 (Waiting time Pn535 → Reverse movement Pn531) × Number of movements Pn536	
Speed Diagram	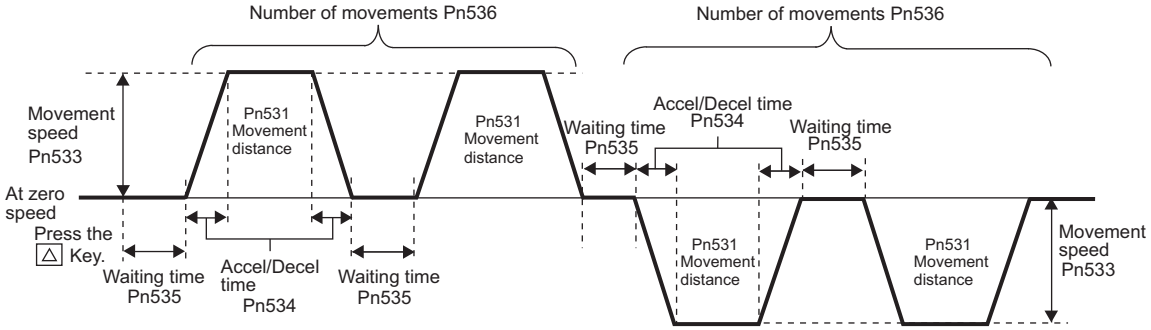
Servomotor Run Status	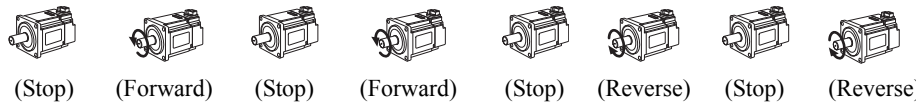

Note: When Pn530.0 is set to 2, infinite time operation is disabled.

Pn530.0 = 3	
(Waiting time Pn535 → Reverse movement Pn531) × Number of movements Pn536 (Waiting time Pn535 → Forward movement Pn531) × Number of movements Pn536	
Speed Diagram	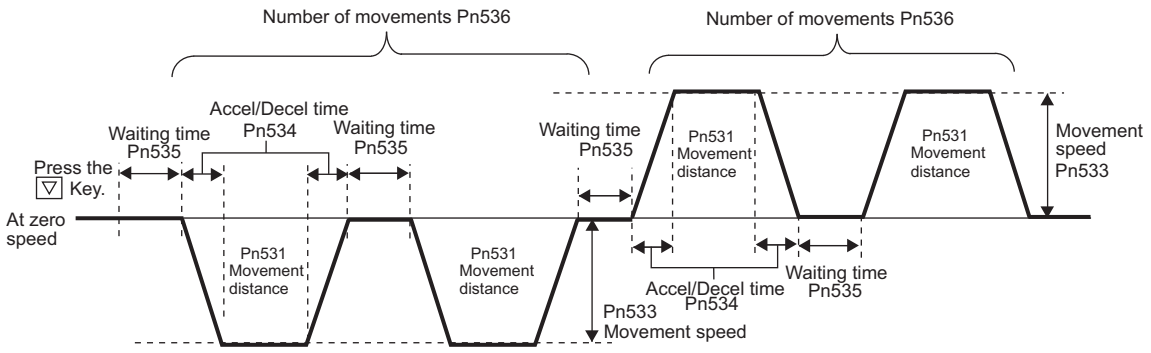
Servomotor Run Status	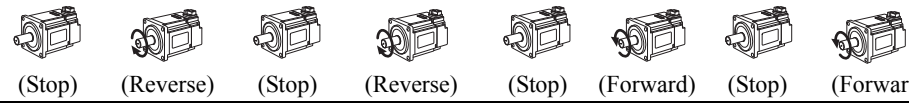

Note: When Pn530.0 is set to 3, infinite time operation is disabled.

Pn530.0 = 4	
(Waiting time Pn535 → Forward movement Pn531 → Waiting time Pn535 → Reserve movement Pn531) × Number of movements Pn536	
Speed Diagram	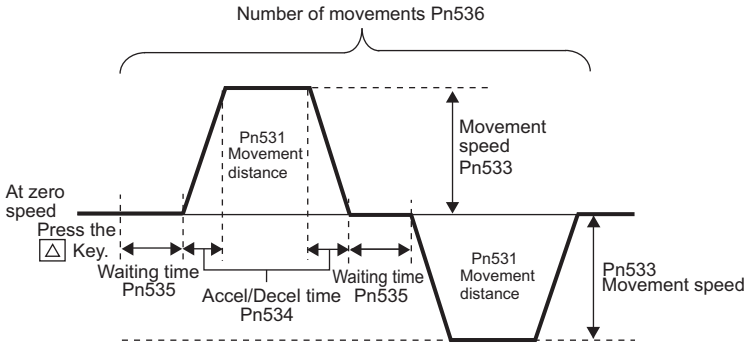
Servomotor Run Status	

Note: When Pn536 (number of times of program JOG movement) is set to 0, infinite time operation is enabled. To stop infinite time operation, press the JOG/SVON Key to turn OFF the servomotor power.

Pn530.0 = 5	
(Waiting time Pn535 → Reverse movement Pn531 → Waiting time Pn535 → Forward movement Pn531) × Number of movements Pn536	
Speed Diagram	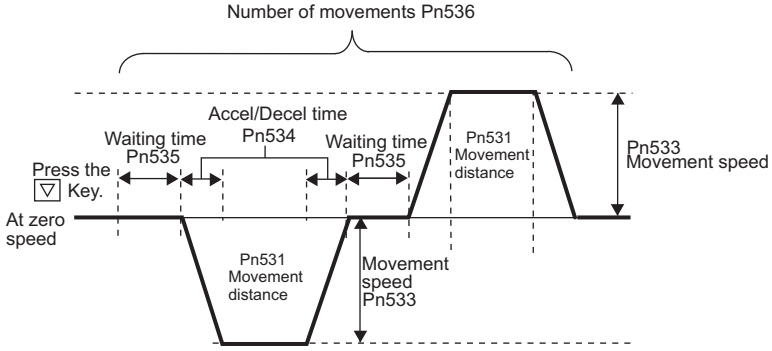
Servomotor Run Status	

Note: When Pn536 (number of times of program JOG movement) is set to 0, infinite time operation is enabled. To stop infinite time operation, press the JOG/SVON Key to turn the servomotor power OFF.

(4) Related Parameters

The following parameters set the program JOG operation pattern. Do not change the settings while the program JOG operation is being executed.

Pn530	Program JOG Operation Related Switch		Speed Position Torque		Classification
	Setting Range	Setting Unit	Factory Setting	When Enabled	
	0000 to 0005	–	0000	Immediately	Setup
Pn531	Program JOG Movement Distance		Speed Position Torque		Classification
	Setting Range	Setting Unit	Factory Setting	When Enabled	
	1 to 1073741824	1 reference unit	32768	Immediately	Setup

(cont'd)

Pn533	Program JOG Movement Speed			Speed Position Torque	Classification
	Setting Range	Setting Unit	Factory Setting	When Enabled	
	1 to 10000	1 min^{-1}*	500	Immediately	Setup
Pn534	Program JOG Acceleration/Deceleration Time			Speed Position Torque	Classification
	Setting Range	Setting Unit	Factory Setting	When Enabled	
	2 to 10000	1 ms	100	Immediately	Setup
Pn535	Program JOG Waiting Time			Speed Position Torque	Classification
	Setting Range	Setting Unit	Factory Setting	When Enabled	
	0 to 10000	1 ms	100	Immediately	Setup
Pn536	Number of Times of Program JOG Movement			Speed Position Torque	Classification
	Setting Range	Setting Unit	Factory Setting	When Enabled	
	0 to 1000	1 time	1	Immediately	Setup

* When using an SGMCS direct drive motor, the setting unit will be automatically changed to 0.1 min^{-1}.

(5) Operating Procedure

Use the following procedure to perform the program JOG operation after setting a program JOG operation pattern.

Step	Display after Operation	Keys	Operation
1	BB –FUNCTION– Fn003:Z-Search Fn004:Program JOG Fn005:Prm Init Fn006:AlmHist Clr	MODE/SET ∧ ∨	Press the MODE/SET Key to view the main menu for the utility function. Use the ∧ or ∨ Key to move through the list and select Fn004.
2	BB –PRG JOG– Pn531=00032768 Pn533=00500 Pn534=00100 Pn536=00010	DATA	Press the DATA Key. The display changes to the Fn004 execution display.
3*	BB –PRG JOG– Pn531=00032768 Pn533=00500 Pn534=00100 Pn536=00010	∧ ∨	Confirm that the parameters have been set. Press the ∨ Key to view Pn530. Press the ∧ Key to view the parameters in the following order: Pn530 → Pn531 → Pn533 → Pn534 → Pn535 → Pn536.
4	RUN –PRG JOG– Pn531=00032768 Pn533=00500 Pn534=00100 Pn536=00010	JOG SVON	Press the JOG SVON Key. The status display changes from "BB" to "RUN", and the servomotor power turns ON.
5	RUN –PRG JOG– Pn531=00032768 Pn533=00500 Pn534=00100 Pn536=00010	∧ ∨	Press the ∧ (forward movement start) or ∨ (reverse movement start) Key according to the first movement direction of the preset operation pattern. The servomotor starts moving after the preset waiting time in Pn535. Note: Pressing the JOG SVON Key again changes the status to "BB" (baseblocked status) and stops movement even during operation.

(cont'd)

Step	Display after Operation	Keys	Operation
6	RUN –PRG JOG– Pn531=00032768 Pn533=00500 Pn534=00100 Pn536=00010	MODE/SET	When the set program JOG operation movement is completed, "END" is displayed for one second, and then "RUN" is displayed. Press the MODE/SET Key. The servomotor becomes base-blocked status. The display returns to the main menu of the utility function.
7	To enable the change in the setting, turn the power OFF and ON again.		

∗ The settings can be changed for a parameter.

6.6 Initializing Parameter Settings (Fn005)

This function is used when returning to the factory settings after changing parameter settings.

IMPORTANT

- Be sure to initialize the parameter settings while the servomotor power is OFF.
- After initialization, turn OFF the power supply and then turn ON again to validate the settings.

Note: Any value adjusted with Fn00C, Fn00D, Fn00E, and Fn00F cannot be initialized by Fn005.

(1) Preparation

The following conditions must be met to initialize the parameter values.

- The write prohibited setting parameter (Fn010) must be set to Write permitted (P.0000).
- The servomotor power must be OFF.

(2) Operating Procedure

Use the following procedure.

Step	Display after Operation	Keys	Operation
1	BB –FUNCTION– Fn004:Program JOG Fn005:Prm Init Fn006:AlmHist Clr Fn008:Mturn Clr	MODE/SET ∧ ∨	Press the MODE/SET Key to view the main menu for the utility function. Use the ∧ or ∨ Key to move through the list and select Fn005.
2	BB Parameter Init Start : [DATA] Return: [SET]	DATA	Press the DATA Key. The display changes to the Fn005 execution display.
3	BB Parameter Init Start : [DATA] Return: [SET]	DATA MODE/SET	Press the DATA Key to initialize parameters. During initialization, "Parameter Init" is flashing in the display. After the initialization is completed, "Parameter Init" stops flashing and the status display changes as follows: "BB" to "DONE" to "BB." Note: Press the MODE/SET Key not to initialize parameters. The display returns to the main menu of the utility function.
4	To enable the change in the setting, turn the power OFF and ON again.		

6.7 Clearing Alarm History (Fn006)

The clear alarm history function deletes all of the alarm history recorded in the SERVOPACK.

Note: The alarm history is not deleted when the alarm reset is executed or the main circuit power supply of the SERVOPACK is turned OFF.

(1) Preparation

The follow conditions must be met to clear the alarm history.

- The write prohibited setting parameter (Fn010) must be set to Write permitted (P.0000).

(2) Operating Procedure

Use the following procedure.

Step	Display after Operation	Keys	Operation
1	BB –FUNCTION– Fn005:Prm Init Fn006:AlmHist Clr Fn008:Mturn Clr Fn009:Ref Adj	MODE/SET ∧ ∨	Press the MODE/SET Key to view the main menu for the utility function. Use the ∧ or ∨ Key to move through the list and select Fn006.
2	BB Alarm History Data Clear Start : [DATA] Return: [SET]	DATA	Press the DATA Key. The display changes to the Fn006 execution display.
3	BB Alarm History Data Clear Start : [DATA] Return: [SET]	DATA MODE/SET	Press the DATA Key to clear the alarm history. While clearing the data, "DONE" is displayed in the status display. After the data has been successfully cleared, "BB" is displayed. Note: Press the MODE/SET Key not to clear the alarm history. The display returns to the main menu of the utility function.

6.8 Offset Adjustment of Analog Monitor Output (Fn00C)

This function is used to manually adjust the offsets for the analog monitor outputs (torque reference monitor output and motor speed monitor output). The offset values are factory-set before shipping. Therefore, the user need not usually use this function.

(1) Adjustment Example

An example of offset adjustment to the motor speed monitor is shown below.

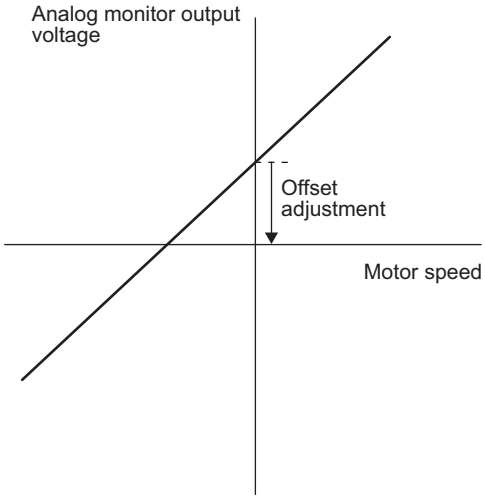

Item	Specifications
Offset Adjustment Range	-2.4 V to + 2.4 V
Adjustment Unit	18.9 mV/LSB

Note:

- The adjustment value will not be initialized when parameter settings are initialized using Fn005.
- Make offset adjustment with a measuring instrument connected, so that the analog monitor output is zero. An example of settings for a zero analog monitor output is shown below.
  - While the servomotor is not turned ON, set the monitor signal to the torque reference.
  - In speed control, set the monitor signal to the position error.

(2) Preparation

The following condition must be met to adjust the offsets of the analog monitor output.

- The write prohibited setting parameter (Fn010) must be set to Write permitted (P.0000).

(3) Operating Procedure

Use the following procedure to perform the offset adjustment of analog monitor output.

Step	Display after Operation	Keys	Operation
1	BB –FUNCTION– Fn00B:Trq Adj Fn00C:MonZero Adj Fn00D:MonGain Adj Fn00E:Cur AutoAdj	MODE/SET ∧ ∨	Press the MODE/SET Key to view the main menu for the utility function. Use the ∧ or ∨ Key to move through the list and select Fn00C.
2	BB –Zero ADJ– CH1=–00002 CH2= 00001 Un002= 00000 Un000= 00000	DATA	Press the DATA Key. The display changes to the Fn00C execution display.
3	BB –Zero ADJ– CH1=–00005 CH2= 00001 Un002= 00000 Un000= 00000	∧ ∨	Press the ∧ or ∨ Key to adjust the offset of CH1 (torque reference monitor). Adjust the offset so that the measurement instrument reading is as close to 0 V as possible.
4	BB –Zero ADJ– CH1=–00005 CH2= 00001 Un002= 00000 Un000= 00000	SCROLL	After the offset adjustment of CH1 has completed, adjust the offset of CH2 (motor rotating speed monitor). Press the SCROLL Key. The cursor moves to CH2 side.
5	BB –Zero ADJ– CH1=–00005 CH2= 00006 Un002= 00000 Un000= 00000	∧ ∨	Adjust the offset of CH2 in the same way as for CH1. Press the ∧ or ∨ Key to adjust the offset of CH2. Adjust the offset so that the measurement instrument reading is as close to 0 V as possible.
6	BB –Zero ADJ– CH1=–00005 CH2= 00006 Un002= 00000 Un000= 00000	DATA	After having completed the offset adjustment both for CH1 and CH2, press the DATA Key. The adjustment results are saved in the SERVO-PACK, and the status display shows "DONE" for one second. The status display then returns to show "BB" again.
7	BB –FUNCTION– Fn00B:Trq Adj Fn00C:MonZero Adj Fn00D:MonGain Adj Fn00E:Cur AutoAdj	MODE/SET	Press the MODE/SET Key. The display returns to the main menu of the utility function.

6.9 Gain Adjustment of Analog Monitor Output (Fn00D)

This function is used to manually adjust the gains for the analog monitor outputs (torque reference monitor output and motor rotating speed monitor output). The gain values are factory-set before shipping. Therefore, the user need not usually use this function.

(1) Adjustment Example

An example of gain adjustment to the motor rotating speed monitor is shown below.

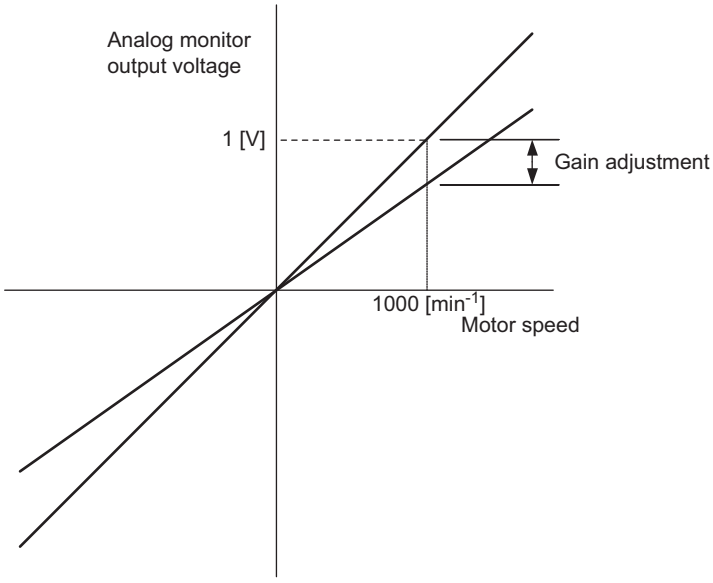

Item	Specifications
Gain-adjustment Range	100±50%
Adjustment Unit	0.4%/LSB

The gain adjustment range is made with a 100% output set as a center value (adjustment range: 50% to 150%). The following is a setting example.

<Setting the Set Value to –125>

100% + (–125 × 0.4) = 50%

Therefore, the monitor output voltage is 0.5 time as high.

<Setting the Set Value to 125>

100% + (125 × 0.4) =150%

Therefore, the monitor output voltage is 1.5 times as high.

Note: The adjustment value will not be initialized when parameter settings are initialized using Fn005.

(2) Preparation

The following condition must be met to adjust the gain of the analog monitor output.

- The write prohibited setting parameter (Fn010) must be set to Write permitted (P.0000).

(3) Operating Procedure

Use the following procedure to perform the gain adjustment of analog monitor output.

Step	Display after Operation	Keys	Operation
1	BB –FUNCTION– Fn00C:MonZero Adj Fn00D:MonGain Adj Fn00E:Cur AutoAdj Fn00F:Cur ManuAdj	MODE/SET ∧ ∨	Press the MODE/SET Key to view the main menu for the utility function. Use the ∧ or ∨ Key to move through the list and select Fn00D.
2	BB –Gain ADJ– CH1=–00001 CH2=–00001 Un002= 00000 Un000= 00000	DATA	Press the DATA Key. The display changes to the Fn00D execution display.
3	BB –Gain ADJ– CH1= 00125 CH2=–00001 Un002= 00000 Un000= 00000	∧ ∨	Press the ∨ or ∧ Key to adjust the gain adjustment width of CH1 (torque reference monitor).
4	BB –Gain ADJ– CH1= 00125 CH2=–00001 Un002= 00000 Un000= 00000	SCROLL	After the gain adjustment of CH1 has completed, adjust the gain adjustment width of CH2 (motor rotating speed monitor). Press the SCROLL Key. The cursor moves to CH2 side.
5	BB –Gain ADJ– CH1= 00125 CH2=–00125 Un002= 00000 Un000= 00000	∧ ∨	Adjust the gain of CH2 in the same way as for CH1. Press the ∧ or ∨ Key to adjust the gain adjustment width of CH2.
6	BB –Gain ADJ– CH1= 00125 CH2=–00125 Un002= 00000 Un000= 00000	DATA	After having completed the adjustment both for CH1 and CH2, press the DATA Key. The adjustment results are saved in the SERVO-PACK, and the status display shows "DONE" for one second. The status display then returns to show "BB" again.
7	BB –FUNCTION– Fn00C:MonZero Adj Fn00D:MonGain Adj Fn00E:Cur AutoAdj Fn00F:Cur ManuAdj	MODE/SET	Press the MODE/SET Key. The display returns to the main menu of the utility function.

6.10 Automatic Offset-Signal Adjustment of the Motor Current Detection Signal (Fn00E)

Perform this adjustment only if highly accurate adjustment is required for reducing torque ripple caused by current offset. The user need not usually use this function.

IMPORTANT

- Be sure to perform this function while the servomotor power is OFF.
- Execute the automatic offset adjustment if the torque ripple is too big when compared with those of other SERVOPACKs.

Note: The adjusted value is not initialized by executing the Fn005 function (Initializing Parameter Settings).

(1) Preparation

The following conditions must be met to automatically adjust the offset of the motor current detection signal.

- The write prohibited setting parameter (Fn010) must be set to Write permitted (P.0000).
- The SERVOPACK must be in Servo Ready status (Refer to *4.8.4*).
- The servomotor power must be OFF.

(2) Operating Procedure

Use the following procedure.

Step	Display after Operation	Keys	Operation
1	BB –FUNCTION– Fn00D:MonGain Adj Fn00E:Cur AutoAdj Fn00F:Cur ManuAdj Fn010:Prm Protect	MODE/SET ∧ ∨	Press the MODE/SET Key to view the main menu for the utility function. Use the ∧ or ∨ Key to move through the list and select Fn00E.
2	BB Auto Offset–ADJ of Motor Current Start : [DATA] Return: [SET]	DATA	Press the DATA Key. The display changes to the Fn00E execution display.
3	BB Auto Offset–ADJ of Motor Current Start : [DATA] Return: [SET]	DATA MODE/SET	Press the DATA Key to start the automatic offset-signal adjustment of motor current detection. When the adjustment is completed, the status display shows "DONE" for one second. The status display then returns to show "BB" again. Note: Press the MODE/SET Key to cancel the automatic adjustment. The display returns to the main menu of the utility function.

6.11 Manual Offset-Signal Adjustment of the Motor Current Detection Signal (Fn00F)

Use this function only if the torque ripple is still high after the automatic offset-signal adjustment of the motor current detection signal (Fn00E).

IMPORTANT

If this function is adjusted incorrectly and then executed, characteristics of the servomotor performance could be affected.

Observe the following precautions when performing manual servo tuning.

- Run the servomotor at a speed of approximately 100 min^{-1}.
- Adjust the offset while monitoring the torque reference with the analog monitor until the ripple of torque reference monitor's waveform is minimized.
- Adjust the phase-U and phase-V offset amounts alternately several times until these offsets are well balanced.

Note: The adjusted value is not initialized by executing the Fn005 function (Initializing Parameter Settings).

(1) Preparation

The following condition must be met to manually adjust the offset of the motor current detection signal.

- The write prohibited setting parameter (Fn010) must be set to Write permitted (P.0000).

(2) Operating Procedure

Use the following procedure.

Step	Display after Operation	Keys	Operation
1	BB –FUNCTION– Fn00F:Cur ManuAdj Fn010:Prm Protect Fn011:Motor Info Fn012:Soft Ver	MODE/SET ∧ ∨	Press the MODE/SET Key to view the main menu for the utility function. Use the ∧ or ∨ Key to move through the list and select Fn00F.
2	BB Manual Offset–ADJ of Motor Current ZADJIU=-00009 ZADJIV=-00006	DATA	Press the DATA Key. The display changes to the Fn00F execution display.
3	RUN Manual Offset–ADJ of Motor Current ZADJIU=-00009 ZADJIV=-00006		Send an SV_ON command from the host controller.
4	RUN Manual Offset–ADJ of Motor Current ZADJIU=-00019 ZADJIV=-00006	∧ ∨	Adjust the phase-U offset. Press the ∨ or ∧ Key to adjust the offset amount. Adjust the offset amount by 10 in the direction that the torque ripple is reduced. Adjustment range: -512 to +511 (ZADJIU: Offset value of phase-U current)
5	RUN Manual Offset–ADJ of Motor Current ZADJIU=-00019 ZADJIV=-00006	SCROLL	Adjust the phase-V offset. Press the SCROLL Key. The cursor moves to the phase-V side.
6	RUN Manual Offset–ADJ of Motor Current ZADJIU=-00019 ZADJIV=-00016	∧ ∨	Press the ∨ or ∧ Key to adjust the offset amount. Adjust the offset amount by 10 in the direction that the torque ripple is reduced. Adjustment range: -512 to +511 (ZADJIV: Offset value of phase-V current)

(cont'd)

Step	Display after Operation	Keys	Operation
	Repeat the operations of steps 4 to 6 (phase-U and-V alternately) until adjusting the offset amounts both for phase-U and -V in both directions cannot reduce the torque ripple any more. Then, perform the same operation by adjusting by smaller amount.		
7	RUN Manual Offset-ADJ of Motor Current ZADJIU=-00019 ZADJIV=-00016	DATA	Press the DATA Key to save the result of adjustment in the SERVOPACK. When the saving is completed, the status display shows "DONE" for one second. The status display then returns to show "RUN" again.
8	RUN -FUNCTION- Fn00F:Cur ManuAdj Fn010:Prm Protect Fn011:Motor Info Fn012:Soft Ver	MODE/SET	Press the MODE/SET Key. The display returns to the main menu of the utility function.

6.12 Write Prohibited Setting (Fn010)

This function prevents changing parameters by mistake and sets restrictions on the execution of the utility function.

Parameter changes and execution of the utility function become restricted in the following manner when Write prohibited (P.0001) is assigned to the write prohibited setting parameter (Fn010).

- Parameters: Cannot be changed. If you attempt to change it, "NO-OP" will flash on the display and the screen will return to the main menu.
- Utility Function: Some functions cannot be executed. (Refer to the following table.) If you attempt to execute these utility functions, "NO-OP" will flash on the display and the screen will return to the main menu.

Parameter No.	Function	Write Prohibited Setting	Reference Section
Fn000	Alarm history display	Executable	6.2
Fn002	JOG operation	Cannot be executed	6.3
Fn003	Origin search	Cannot be executed	6.4
Fn004	Program JOG operation	Cannot be executed	6.5
Fn005	Initializing parameter settings	Cannot be executed	6.6
Fn006	Clearing alarm history	Cannot be executed	6.7
Fn008	Absolute encoder multiturn reset and encoder alarm reset	Cannot be executed	4.7.4
Fn00C	Offset adjustment of analog monitor output	Cannot be executed	6.8
Fn00D	Gain adjustment of analog monitor output	Cannot be executed	6.9
Fn00E	Automatic offset-signal adjustment of the motor current detection signal	Cannot be executed	6.10
Fn00F	Manual offset-signal adjustment of the motor current detection signal	Cannot be executed	6.11
Fn010	Write prohibited setting	–	6.12
Fn011	Servomotor model display	Executable	6.13
Fn012	Software version display	Executable	6.14
Fn013	Multiturn limit value setting change when a multiturn limit disagreement alarm occurs	Cannot be executed	4.7.7
Fn014	Resetting configuration error in option modules	Cannot be executed	6.15
Fn01B	Vibration detection level initialization	Cannot be executed	6.16
Fn01E	Display of SERVOPACK and servomotor ID	Executable	6.17
Fn01F	Display of servomotor ID in feedback option module	Executable	6.18
Fn020	Origin setting	Cannot be executed	6.19
Fn030	Software reset	Executable	6.20
Fn200	Tuning-less levels setting	Cannot be executed	5.2.2
Fn201	Advanced autotuning	Cannot be executed	5.3.2
Fn202	Advanced autotuning by reference	Cannot be executed	5.4.2
Fn203	One-parameter tuning	Cannot be executed	5.5.2
Fn204	Anti-resonance control adjustment function	Cannot be executed	5.6.2
Fn205	Vibration suppression function	Cannot be executed	5.7.2
Fn206	EasyFFT	Cannot be executed	6.21
Fn207	Online vibration monitor	Cannot be executed	6.22

(1) Preparation

There are no tasks that must be performed before the execution.

(2) Operating Procedure

Follow the steps to set enable or disable writing.
Setting values are as follows:

- "P.0000": Write permitted (Releases write prohibited mode.) [Factory setting]
- "P.0001": Write prohibited (Parameters become write prohibited from the next power ON.)

Step	Display after Operation	Keys	Operation
1	BB –FUNCTION– Fn00F:Cur ManuAdj Fn010:Prm Protect Fn011:Motor Info Fn012:Soft Ver	MODE/SET ∧ ∨	Press the MODE/SET Key to view the main menu for the utility function. Use the ∧ or ∨ Key to move through the list and select Fn010.
2	BB Parameter Write Protect P. 0000	DATA	Press the DATA Key. The display changes to the Fn010 execution display.
3	BB Parameter Write Protect P. 0001	∧ ∨	Press the ∧ or ∨ Key to select one of the following settings. P.0000: Write permitted [Factory setting] P.0001: Write prohibited
4	BB Parameter Write Protect P. 0001	DATA	Press the DATA Key. The setting value is written into the SERVOPACK, and the status display changes as follows: "BB" to "DONE" to "BB." Note: Saved settings will be enabled after the SERVOPACK is restarted.
5	To enable the change in the setting, turn the power OFF and ON again.		

Note: To make the setting available, change the setting to P.0000 as shown in step 3.

6.13 Servomotor Model Display (Fn011)

This function is used to check the servomotor model, voltage, capacity, encoder type, and encoder resolution. If the SERVOPACK has been custom-made, you can also check the specification codes of SERVOPACKs.

(1) Preparation

There are no tasks that must be performed before the execution.

(2) Operating Procedure

Use the following procedure.

Step	Display after Operation	Keys	Operation
1	BB —FUNCTION— Fn010 : Prm Protect Fn011 : Motor Info Fn012 : Soft Ver Fn013 : MturnLmSet	MODE/SET ∧ ∨	Press the MODE/SET Key to view the main menu for the utility function. Use the ∧ or ∨ Key to move through the list and select Fn011.
2	Servomotor Model 60 SGMAV 62 SGMSV 63 SGMGV 6D SGMJV 21 SGMPS 32 SGMCS-□□C 33 SGMCS-□□D 34 SGMCS-□□B 35 SGMCS-□□E 36 SGMCS-□□L 37 SGMCS-□□M 38 SGMCS-□□N 39 SGMCS-□□R Servomotor input voltage BB –MotorInfo– TYPE 60 AC200V 400W ENCORDER 01 20bit Encoder Type Code Type 00 Incremental 01 Multiturn absolute value 02 Absolute value per rotation* Servomotor capacity Encoder Resolution Code Resolution 13 13 bit 17 17 bit 20 20 bit * The absolute encoder that shows values for a single rotation can only be used with a direct drive motor.	DATA	Press the DATA Key. The display changes to the Fn011 execution display and shows the information about the servomotor and encoder being used.
3	BB —FUNCTION— Fn010 : Prm Protect Fn011 : Motor Info Fn012 : Soft Ver Fn013 : MturnLmSet	MODE/SET	Press the MODE/SET Key. The display returns to the main menu of the utility function.

6.14 Software Version Display (Fn012)

Select Fn012 to check the SERVOPACK and encoder software version numbers.

(1) Preparation

There are no tasks that must be performed before the execution.

(2) Operating Procedure

Use the following procedure.

Step	Display after Operation	Keys	Operation
1	BB –FUNCTION– Fn011:Motor Info Fn012:Soft Ver Fn013:MturnLmSet Fn014:Opt Init	MODE/SET ∧ ∨	Press the MODE/SET Key to view the main menu for the utility function. Use the ∧ or ∨ Key to move through the list and select Fn012.
2	BB –Soft Ver– DRIVER Ver.=0001 ENCODER Ver.=0003	DATA	Press the DATA Key. The display changes to the Fn012 execution display. The software versions of the SERVOPACK and the connected encoder will appear. Note: If the servomotor is not connected, "Not connect" is displayed.
3	BB –FUNCTION– Fn011:Motor Info Fn012:Soft Ver Fn013:MturnLmSet Fn014:Opt Init	MODE/SET	Press the MODE/SET Key. The display returns to the main menu of the utility function.

6.15 Resetting Configuration Errors in Option Modules (Fn014)

The SERVOPACK with option module recognizes installation status and types of option modules that are connected to SERVOPACK. If an error is detected, the SERVOPACK issues an alarm. This function clears these alarms.

Note 1. Alarms related to option module can be cleared only by this function. These alarms cannot be cleared by alarm reset or turning OFF the main circuit power supply.
2. Before clearing the alarm, perform corrective action for the alarm.

(1) Preparation

The following condition must be met to clear detection alarms of the option module.

• The write prohibited setting parameter (Fn010) must be set to Write permitted (P.0000).

(2) Operating Procedure

Use the following procedure.

Step	Display after Operation	Keys	Operation
1	BB –FUNCTION– Fn013:MturnLmSet Fn014:Opt Init Fn01B:VibIvl Init Fn01E:SvMotOp ID	MODE/SET ∧ ∨	Press the MODE/SET Key to view the main menu for the utility function. Use the ∧ or ∨ Key to move through the list and select Fn014.
2	BB –Opt Init– 02:Safety Opt 03:Feedback Opt	DATA	Press the DATA Key. The display changes to the Fn014 execution display.
3	BB –Opt Init– 02:Safety Opt 03:Feedback Opt	∧ ∨	Press the ∨ or ∧ Key to select an option module to be cleared.
4	BB –Opt Init– Feedback Opt Initialize Start :[DATA] Return:[SET]	DATA	Press the DATA Key. The display shown on the left appears.
5	BB –Opt Init– 02:Safety Opt 03:Feedback Opt	DATA	Press the DATA Key to clear the configuration error of the option module. The error is cleared and the status display shows "DONE" for one second. The status display then returns to step 3.
6	BB –FUNCTION– Fn013:MturnLmSet Fn014:Opt Init Fn01B:VibILvl Init Fn01E:SvMotOp ID	MODE/SET	Press the MODE/SET Key. The display returns to the main menu of the utility function.
7	To enable the change in the setting, turn the power OFF and ON again.		

6.16 Vibration Detection Level Initialization (Fn01B)

This function detects vibration when servomotor is connected to a machine in operation and automatically adjusts the vibration detection level (Pn312) to output more exactly the vibration alarm (A.520) and the vibration warning (A.911).

The vibration detection function detects vibration elements according to the motor speed.

Parameter		Meaning	When Enabled	Classification
Pn310	n.□□□0 [Factory setting]	Does not detect vibration.	Immediately	Setup
	n.□□□1	Outputs the warning (A.911) when vibration is detected.		
	n.□□□2	Outputs the alarm (A.520) when vibration is detected.		

If the vibration exceeds the detection level calculated by the following formula, the alarm or warning will be output according to the setting of vibration detection switch (Pn310).

$$\text{Detection level} = \frac{\text{Vibration detection level (Pn312 [min}^{-1}\text{])} \times \text{Vibration detection sensitivity (Pn311 [\%])}}{100}$$

- Use this function if the vibration alarm (A.520) or the vibration warning (A.911) is not output correctly when a vibration at the factory setting of the vibration detection level (Pn312) is detected. In other cases, it is not necessary to use this function.
- The vibration alarm or warning detection sensibility differs depending on the machine conditions. In this case, fine-tune the setting of the vibration detection sensitivity (Pn311) using the above detection level formula as a guide.

Pn311	Vibration Detection Sensitivity		Speed Position Torque		Classification
	Setting Range	Setting Unit	Factory Setting	When Enabled	
	50 to 500	1%	100	Immediately	Tuning

IMPORTANT

- The vibration may not be detected because of improper servo gains. Also, not all kinds of vibrations can be detected. Use the detection result as a guideline.
- Set a proper moment of inertia ratio (Pn103). Improper setting may result in the vibration alarm, warning misdetection, or non-detection.
- The references that are used to operate your system must be input to execute this function.
- Execute this function under the operating condition for which the vibration detection level should be set.
- Execute this function while the motor speed reaches at least 10% of its maximum.

(1) Preparation

The following conditions must be met to initialize the vibration detection level.

- The write prohibited setting parameter (Fn010) must be set to Write permitted (P.0000).
- The test without a motor function must be disabled (Pn00C.0 = 0).

(2) Operating Procedure

Use the following procedure.

Step	Display after Operation	Keys	Operation
1	RUN –FUNCTION– Fn014:Opt Init Fn01B:Viblvl Init Fn01E:SvMotOp ID Fn01F:FBOpMot ID	MODE/SET ∧ ∨	Press the MODE/SET Key to view the main menu for the utility function. Use the ∧ or ∨ Key to move through the list and select Fn01B.
2	RUN Vibration Detect Level Init Start : [DATA] Return: [SET]	DATA	Press the DATA Key. The display changes to the Fn01B execution display.
3	RUN Vibration Detect Level Init Init	DATA	Press the DATA Key. "Init" is displayed flashing, and the vibration level is detected and initialized. Note: Continues initialization until the DATA Key is pressed again.
4	RUN Vibration Detect Level Init DONE	DATA	Press the DATA Key. The display changes from "Init" to "DONE," for one second and the new setting of Pn312 becomes enabled.
5	RUN –FUNCTION– Fn014:Opt Init Fn01B:Viblvl Init Fn01E:SvMotOp ID Fn01F:FBOpMot ID	MODE/SET	Press the MODE/SET Key. The display returns to the main menu of the utility function.

(3) Related Parameters

The following table lists parameters related to this function and their possibility of being changed while executing this function or of being changed automatically after executing this function.

• Parameters related to this function

These are parameters that are used or referenced when executing this function.

• Allowed changes during execution of this function

Yes : Parameters can be changed using SigmaWin+ while this function is being executed.
No : Parameters cannot be changed using SigmaWin+ while this function is being executed.

• Automatic changes after execution of this function

Yes : Parameter set values are automatically set or adjusted after execution of this function.
No : Parameter set values are not automatically set or adjusted after execution of this function.

Parameter	Name	Mid-execution changes	Automatic changes
Pn311	Vibration Detection Sensitivity	Yes	No
Pn312	Vibration Detection Level	No	Yes

6.17 Display of SERVOPACK and Servomotor ID (Fn01E)

This function displays ID information for SERVOPACK, servomotor, encoder, and option module connected to the SERVOPACK. The ID information of some option modules (SGDV-OFA01A) is not stored in the SERVOPACK. "Not available" will be displayed for these option modules.

To use this function, the digital operator (JUSP-OP05A-1-E) or SigmaWin+ is needed.

Refer to *Σ-V Series User's Manual, Operation of Digital Operator* (No.: SIEP S800000 55) for the operating procedure of the digital operator.

The following items can be displayed.

ID	Items to be Displayed
SERVOPACK ID	• SERVOPACK model • SERVOPACK serial number • SERVOPACK manufacturing date • SERVOPACK input voltage (V) • Maximum applicable motor capacity (W) • Maximum applicable motor rated current (Arms)
Servomotor ID	• Servomotor model • Servomotor order number • Servomotor manufacturing date • Servomotor input voltage (V) • Servomotor capacity (W) • Servomotor rated current (Arms)
Encoder ID	• Encoder model • Encoder serial number • Encoder manufacturing date • Encoder type/resolution
Safety Option Module ID*	• Safety Option Module model • Safety Option Module serial number • Safety Option Module manufacturing date • Safety Option Module ID number
Feedback Option Module ID*	• Feedback Option Module model • Feedback Option Module serial number (Reserved area) • Feedback Option Module manufacturing date • Feedback Option Module ID

* If the option module is not connected, "Not connect" will be displayed after the module name.

(1) Preparation

There are no tasks that must be performed before the execution.

(2) Operating Procedure

Use the following procedure.

Step	Display after Operation	Keys	Operation
1	RUN –FUNCTION– Fn01B:ViblvI Init Fn01E:SvMotOp ID Fn01F:FBOpMot ID Fn020:S–Orig Set	MODE/SET ∧ ∨	Press the MODE/SET Key to view the main menu for the utility function. Use the ∧ or ∨ Key to move through the list and select Fn01E.
2	Serial number SERVOPACK model BB –SvMotOp ID– Driver SGDV–R70A21A D00241234590001 09. 04 200V, 50W Manufacturing date / Motor input voltage / Motor capacity	DATA < >	Press the DATA Key. The display changes to the Fn01E execution display. The SERVOPACK ID information is displayed. Use the < or > Key to scroll left and right and to view other information.
3	Serial number Servomotor model BB –SvMotOp ID– Motor SGMAV–A5A3A21 D00245789090001 07. 04 200V, 50W Manufacturing date / Motor input voltage / Motor capacity	DATA < >	Press the DATA Key. The servomotor ID information is displayed. Use the < or > Key to scroll left and right and to view other information.
4	Serial number Encoder model BB –SvMotOp ID– Encoder UTVIH–B20EA K247–0225E00200 07. 04 20bit–ABS Manufacturing date / Encoder resolution / Encoder type	DATA < >	Press the DATA Key. The encoder ID information is displayed. Use the < or > Key to scroll left and right and to view other information.
5	RUN –FUNCTION– Fn01B:ViblvI Init Fn01E:SvMotOp ID Fn01F:FBOpMot ID Fn020:S–Orig Set	MODE/SET	Press the MODE/SET Key. The display returns to the main menu of the utility function.

6.18 Display of Servomotor ID in Feedback Option Module (Fn01F)

This function displays ID information for servomotor and encoder in Feedback Option Module connected to the SERVOPACK. If the option module is not connected, "Not connect" will be displayed after the module name.

To use this function, the digital operator (JUSP-OP05A-1-E) or SigmaWin+ is needed.

Refer to *Σ-V Series User's Manual, Operation of Digital Operator* (No.: SIEP S800000 55) for the operating procedure of the digital operator.

The following items can be displayed.

ID	Items to be Displayed
Servomotor ID	• Servomotor model • Servomotor order number • Servomotor input voltage (V) • Servomotor capacity (W) • Servomotor rated current (Arms)
Encoder ID	• Encoder model • Encoder serial number • Encoder type/resolution (Two types of resolution display available: Number of bits and number of pulses/rev.)

(1) Preparation

There are no tasks that must be performed before the execution.

(2) Operating Procedure

Use the following procedure.

Step	Display after Operation	Keys	Operation
1	BB –FUNCTION– Fn01E:SvMotOp ID Fn01F:FBOpMot ID Fn020:S–Orig Set Fn030:Soft Reset	MODE/SET ∧ ∨	Press the MODE/SET Key to view the main menu for the utility function. Use the ∧ or ∨ Key to move through the list and select Fn01F.
2*	Serial number Servomotor model BB –FBOpMotID– Motor SGM–04A312 R10419–511–DK5000 200V, 400W Input voltage Capacity	DATA < >	Press the DATA Key. The display changes to the Fn01F execution display. The servomotor ID information is displayed. Use the < or > Key to scroll left and right and to view other information.
3	Encoder type/resolution Encoder model BB –FBOpMotID– Encoder UTSTH–U13DB Serial No. 13bit–INC	DATA < >	Press the DATA Key. The encoder ID information is displayed. Use the < or > Key to scroll left and right and to view other information.
4	BB –FUNCTION– Fn01E:SvMotOp ID Fn01F:FBOpMot ID Fn020:S–Orig Set Fn030:Soft Reset	MODE/SET	Press the MODE/SET Key. The display returns to the main menu of the utility function.

* When fully-closed loop control is being used, step 2 is not included.

6.19 Origin Setting (Fn020)

When using an external absolute encoder for fully-closed loop control, this function is used to set the current position of the external absolute encoder as the origin (zero point position).

This function can be used with the following products.
Mitutoyo Corporation
ABS ST780A series
Model: ABS ST78□A/ST78□AL

IMPORTANT

- After execution of origin setting, the servo ready (/S-RDY) signal will become inactive because the system position data will have been changed. Always turn the power supply OFF and then ON again after execution of origin setting.

(1) Preparation

The following conditions must be met to set the origin.

- The write prohibited setting parameter (Fn010) must be set to Write permitted (P.0000).
- The servomotor power must be OFF.

(2) Operating Procedure

Use the following procedure.

Step	Display after Operation	Keys	Operation
1	BB –FUNCTION– Fn01F:FBOpMot ID Fn020:S–Orig Set Fn030:Soft Reset Fn080:Pole Detect	MODE/SET ∧ ∨	Press the MODE/SET Key to view the main menu for the utility function. Use the ∧ or ∨ Key to move through the list and select Fn020.
2	BB Scale Origin Set ORGSET1	DATA	Press the DATA Key. The display changes to the Fn020 execution display.
3	BB Scale Origin Set ORGSET5	∧ ∨	Press the ∧ or ∨ Key to "ORGSET5".
4	BB Scale Origin Set	DATA	Press the DATA key to start setting the origin. The message, "Scale Origin Set," flashes while the origin is being set. After the origin has been successfully set, the displayed status changes as follows: "BB" to "DONE" to "BB".
5	To enable the change in the setting, turn the power OFF and ON again.		

6.20 Software Reset (Fn030)

This function enables resetting the SERVOPACK internally from software. This function is used when resetting alarms and changing the settings of parameters that normally require restarting the SERVOPACK. This function can be used to change those parameters without restarting the SERVOPACK.

IMPORTANT

- Start software reset operation after the servomotor power is OFF.
- This function resets the SERVOPACK independently of host controller. The SERVOPACK carries out the same processing as when the power supply is turned ON and outputs the ALM signal. The status of other output signals may be forcibly changed.

(1) Preparation

The following condition must be met to perform a software reset.

- The servomotor power must be OFF.

(2) Operating Procedure

Use the following procedure.

Step	Display after Operation	Keys	Operation
1	BB –FUNCTION– Fn020:S–Orig Set Fn030:Soft Reset Fn080:Pole Detect Fn200:TuneLvl Set	MODE/SET ∧ ∨	Press the MODE/SET Key to view the main menu for the utility function. Use the ∧ or ∨ Key to move through the list and select Fn030.
2	BB Software Reset RESET1	DATA	Press the DATA Key. The display changes to the Fn030 execution display.
3	BB Software Reset RESET5	∧ ∨	Press the ∧ or ∨ Key to select "RESET5".
4	BB Software Reset	DATA	Press the DATA Key to execute the software reset. After the software reset starts, "RESET5" will no longer be displayed.
5	File First Loading Please Wait...		After the reset has been successfully completed, the screen which appears when the power is turned ON will be displayed. The screen will then show parameters or monitor displays.
6	BB –FUNCTION– Fn020:S–Orig Set Fn030:Soft Reset Fn080:Pole Detect Fn200:TuneLvl Set	MODE/SET	Press the MODE/SET Key. The display returns to the main menu of the utility function.

6.21 EasyFFT (Fn206)

EasyFFT sends a frequency waveform reference from the SERVOPACK to the servomotor and slightly rotates the servomotor several times over a certain period, thus causing machine vibration. The SERVOPACK detects the resonance frequency from the generated vibration and makes notch filter settings according to the resonance frequency detection. The notch filter is effective for the elimination of high-frequency vibration and noise.

Execute this function after the servomotor power is turned OFF if operation of the SERVOPACK results in high-frequency noise and vibration.

⚠ WARNING

- The servomotor rotates slightly when EasyFFT is executed. Do not touch the servomotor or machine during execution of EasyFFT, otherwise injury may result.

⚠ CAUTION

- Use the EasyFFT when the servo gain is low, such as in the initial stage of servo adjustment. If EasyFFT is executed after increasing the gain, the servo system may vibrate depending on the machine characteristics or gain balance.

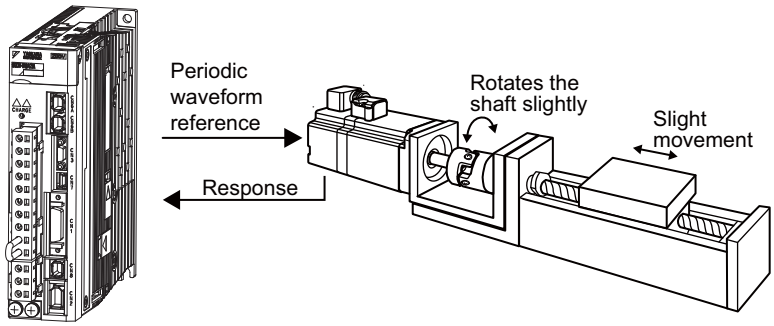

In addition to this function, online vibration monitor (Fn207) can be used to detect machine vibration and automatically make notch filter settings.

If a Σ-V Series SERVOPACK is used to make adjustments, it is recommended to use advanced autotuning. This built-in EasyFFT function is used to maintain interchangeability with previous models. There is normally no need to use it.

(1) Preparation

The following conditions must be met to perform EasyFFT.

- The write prohibited setting parameter (Fn010) must be set to Write permitted (P.0000).
- The main circuit power supply must be ON.
- All alarms must be cleared.
- The hardwire baseblock (HWBB) must be disabled.
- The servomotor power must be OFF.
- There must be no overtravel.
- The test without a motor function must be disabled (Pn00C.0 = 0).
- An external reference must not be input.

(2) Operating Procedure

Use the following procedure.

Step	Display after Operation	Keys	Operation
1	BB –FUNCTION– Fn205:Vib Sup Fn206:Easy FFT Fn207:V-Monitor Fn000:Alm History	MODE/SET ∧ ∨	Press the MODE/SET Key to view the main menu for the utility function. Use the ∧ or ∨ Key to move through the list and select Fn206.
2	BB –Easy FFT– Setting Input = 015%	DATA	Press the DATA Key. The display changes to the Fn206 execution display.
3	BB –Easy FFT– Setting Input = 015%	∧ ∨	The cursor is on the setting of "Input." Press the ∧ or ∨ Key to set the sweep torque reference amplitude (Pn456) Setting range: 1 to 800. Note: When making the initial settings for EasyFFT, do not change the setting for the reference amplitude. Start with the original value of 15. Increasing reference amplitude increases the detection accuracy, but the vibration and noise from the machine will increase. Increase the amplitude value little by little.
4	RUN –Easy FFT– Ready Input = 015%	JOG SVON	Press the JOG SVON Key to turn the servomotor power ON. The display “BB” and “Setting” changes to “RUN” and “Ready.”
5	RUN –Easy FFT– Measure Input = 015%	∧ ∨	Press the ∧ (forward run start) Key or ∨ (reverse run start) Key to run the servomotor and start the frequency measurement. "Measure" is displayed during the measurement. Within a quarter turn, the servomotor will move forward and then in reverse several times. Notes: • Press the MODE/SET Key to cancel the measurement. The servomotor stops moving and the power turns OFF. The detection of the resonance frequency is not completed. • The actions of the servomotor are very minute in this operation. Also at the same time, the servomotor emits a noise. To ensure safety, do not enter the working envelope of the motor.

(cont'd)

Step	Display after Operation	Keys	Operation
6	BB –Easy FFT– Result Input = 015% Res = 1250 Hz Filter1 1250 Hz	JOG SVON	When the detection processing is successfully completed, "Measure" stops flashing and the results and the notch filter value to be set are displayed. If the processing was not completed, "No Measure" is displayed. To check the results, go to step 8. < Important > If two seconds or more are required for the operation although detection was successfully completed, the detection accuracy might be insufficient. Increasing reference amplitude more than 15 increases the detection accuracy, but the vibration and noise from the machine will increase. Increase the amplitude value little by little. Notes: • If a notch filter has been set and is being used, "*" is displayed on the second line. • If the first stage notch filter has been set, the second stage notch filter value is displayed. If the first and second stage notch filters have been set, only the result of frequency detection is displayed.
7	BB –Easy FFT– Ready Input = 015%	MODE/SET <	To exit the EasyFFT function at this stage, press the MODE/SET Key. The power to the servomotor is turned OFF and the display returns to the main menu of the utility function. To remeasure the vibration frequency, press the < Key to return to step 4. Execute steps 5 to 7.
8	DONE –Easy FFT– Result Input = 015% Res = 1250 Hz Filter1 1250 Hz	DATA	Press the DATA Key after the normal completion of frequency detection. The notch filter frequencies are automatically updated to the optimum values. The status display shows "DONE" and the display shown on the left appears. If the first stage notch filter frequency has been set (Pn408.0 = 1), the second stage notch filter frequency (Pn 40C) will automatically be updated. Notes: • If the first stage or the second stage notch filter frequency has already been set (Pn408 = n.□1□1), the notch filter frequency cannot be set. • If the frequency detected by this function is not used, set the notch filter to be invalid (Pn408.0 = 0).
9	BB –FUNCTION– Fn205:Vib Sup Fn206:Easy FFT Fn207:V-Monitor Fn000:Alm History	MODE/SET	Press the MODE/SET Key. The servomotor enters a baseblocked status. The display returns to the main menu of the utility function.
10	To enable the change in the setting, turn the power OFF and ON again.		

(3) Related Parameters

The following table lists parameters related to this function and their possibility of being changed while executing this function or of being changed automatically after executing this function.

• Parameters related to this function

These are parameters that are used or referenced when executing this function.

• Allowed changes during execution of this function

Yes : Parameters can be changed using SigmaWin+ while this function is being executed.
No : Parameters cannot be changed using SigmaWin+ while this function is being executed.

• Automatic changes after execution of this function

Yes : Parameter set values are automatically set or adjusted after execution of this function.
No : Parameter set values are not automatically set or adjusted after execution of this function.

Parameter	Name	Mid-execution changes	Automatic changes
Pn408	Torque Related Function Switch	Yes	Yes
Pn409	1st Notch Filter Frequency	No	Yes
Pn40A	1st Notch Filter Q Value	No	No
Pn40C	2nd Notch Filter Frequency	No	Yes
Pn40D	2nd Notch Filter Q Value	No	No
Pn456	Sweep Torque Reference Amplitude	No	No

6.22 Online Vibration Monitor (Fn207)

If vibration is generated during operation and this function is executed while the servomotor power is still ON, the machine vibration can sometimes be suppressed by setting a notch filter or torque reference filter for the vibration frequencies.

When online, vibration frequency caused by machine resonance will be detected and the frequency that has the highest peak will be displayed on the panel operator. The effective torque reference filter or notch filter frequency for the vibration frequencies will be automatically selected and the related parameters will be automatically set.

In addition to this function, EasyFFT (Fn206) can be used to detect machine vibration and automatically make notch filter settings. Use the following flowchart to determine how these functions should be used.

If a Σ-V Series SERVOPACK is used to make adjustments, it is recommended that you use advanced autotuning. This built-in function is used to maintain interchangeability with previous models. There is normally no need to use it.

How to use EasyFFT (Fn206) and online vibration monitor (Fn207), when they are mainly used for servo gain adjustment.

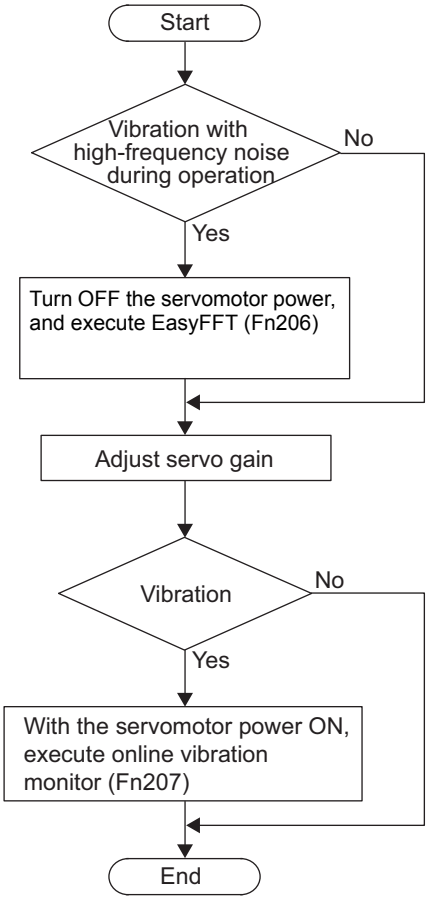

(1) Preparation

The following conditions must be met to perform online vibration monitoring.

- The write prohibited setting parameter (Fn010) must be set to Write permitted (P.0000).
- The servomotor power must be ON.
- There must be no overtravel.
- The correct moment of inertia (Pn103) must be set.
- The test without a motor function must be disabled (Pn00C.0 = 0).

(2) Operating Procedure

Use the following procedure.

Step	Display after Operation	Keys	Operation
1	RUN –FUNCTION– Fn206:Easy FFT Fn207:V–Monitor Fn000:Alm History Fn001:JOG	MODE/SET ∧ ∨	Press the MODE/SET Key to view the main menu for the utility function. Use the ∧ or ∨ Key to move through the list and select Fn207.
2	RUN –V–MONITOR– Measure F1=---- F2=---- F3=----	DATA	Press the DATA Key. The display changes to the Fn207 execution display.
3	RUN –V–MONITOR– Measure F1=---- F2=---- F3=----	DATA	Press the DATA Key for at least one second to start vibration detection. The DATA Key must be pressed until "Measure" flashes on the display. After this message appears, the DATA Key does not have to be pressed and the detection continues automatically.
4	RUN –V–MONITOR– Measure F1= 0850[Hz] F2= 1600[Hz] F3= 0225[Hz]	MODE/SET	When the vibration detection has completed, "Measure" stops flashing and the detection processing ends automatically. When the detection processing has completed normally, the vibrations with three largest peak values in vibration frequency are displayed for F1, F2, and F3. Notes: • Press the MODE/SET Key to quit the online vibration monitor function. The display returns to the main menu of the utility function. • A detected frequency can be displayed. For a vibration with undetectable peak frequency, "----" is displayed. If no frequency was detected, "----" is displayed for F1, F2, and F3. • If the frequency could not be successfully detected, "NO MONITOR" is displayed.
5	DONE –V–MONITOR– SETTING DONE F1= 0850[Hz] F2= 1600[Hz] F3= 0225[Hz]	DATA	After the detection has normally completed, press the DATA Key. The optimum frequency (time constant) of notch filter or torque reference filter for F1 is set automatically. At the same time, the parameter Pn409 is updated for a notch filter, or the parameter Pn401 is updated for a torque reference filter. After the setting is successfully completed, "DONE" flashes.
6	RUN –FUNCTION– Fn206:Easy FFT Fn207:V–Monitor Fn000:Alm History Fn001:JOG	MODE/SET	Press the MODE/SET Key. The display returns to the main menu of the utility function.

(3) Related Parameters

The following table lists parameters related to this function and their possibility of being changed while executing this function or of being changed automatically after executing this function.

• Parameters related to this function
These are parameters that are used or referenced when executing this function.

• Allowed changes during execution of this function
Yes : Parameters can be changed using SigmaWin+ while this function is being executed.
No : Parameters cannot be changed using SigmaWin+ while this function is being executed.

• Automatic changes after execution of this function
Yes : Parameter set values are automatically set or adjusted after execution of this function.
No : Parameter set values are not automatically set or adjusted after execution of this function.

Parameter	Name	Mid-execution changes	Automatic changes
Pn401	Torque Reference Filter Time Constant	No	Yes
Pn408	Torque Related Function Switch	Yes	Yes
Pn409	1st Notch Filter Frequency	No	Yes
Pn40A	1st Notch Filter Q Value	No	No
Pn40C	2nd Notch Filter Frequency	No	No
Pn40D	2nd Notch Filter Q Value	No	No

7

Monitor Displays (Un□□□)

7.1 List of Monitor Displays 7-2

7.2 Viewing Monitor Displays 7-3

7.3 Monitoring Input Signals 7-4

7.3.1 Interpreting Input Signal Display Status 7-4

7.3.2 Input Signal Display Example 7-5

7.4 Monitoring Output Signals 7-6

7.4.1 Interpreting Output Signal Display Status 7-6

7.4.2 Output Signal Display Example 7-6

7.5 Monitoring Safety Input Signals 7-7

7.5.1 Interpreting Safety Input Signal Display Status 7-7

7.5.2 Safety Input Signal Display Example 7-7

7.1 List of Monitor Displays

The monitor displays can be used for monitoring the I/O signal status, and SERVOPACK internal status.

Refer to the following table.

Parameter No.	Description	Unit
Un000	Motor rotating speed	min^{-1}
Un001	Speed reference	min^{-1}
Un002	Internal torque reference (in percentage to the rated torque)	%
Un003	Rotational angle 1 (encoder pulses from the phase-C origin: decimal display)	encoder pulse*3
Un004	Rotational angle 2 (from polarity origin (electric angle))	deg
Un005*1	Input signal monitor	–
Un006*2	Output signal monitor	–
Un007	Input reference pulse speed (valid only in position control)	min^{-1}
Un008	Position error amount (valid only in position control)	reference unit
Un009	Accumulated load ratio (in percentage to the rated torque: effective torque in cycle of 10 seconds)	%
Un00A	Regenerative load ratio (as a percentage of the processable regenerative power: regenerative power consumption in cycle of 10 seconds)	%
Un00B	Power consumed by DB resistance (in percentage to the processable power at DB activation: displayed in cycle of 10 seconds)	%
Un00C	Input reference pulse counter	reference unit
Un00D	Feedback pulse counter	encoder pulse*3
Un00E	Fully-closed feedback pulse counter	external encoder resolution*4
Un012	Total operation time	100 ms
Un013	Feedback pulse counter	reference unit
Un014	Effective gain monitor (gain settings 1 = 1, gain settings 2 = 2)	–
Un015	Safety I/O signal monitor	–
Un020	Motor rated speed	min^{-1}
Un021	Motor maximum speed	min^{-1}
Un022*5	Installation environment monitor (Gives the usage status as a percentage of the installation environment.)	%
Un030	The current backlash compensation value	0.1 reference unit
Un031	Backlash compensation setting limit value	0.1 reference unit

*1. For details, refer to *7.3 Monitoring Input Signals*.
*2. For details, refer to *7.4 Monitoring Output Signals*.
*3. For details, refer to *4.4.3 Electronic Gear*.
*4. For details, refer to *8.3.3 Setting Encoder Output Pulses (PAO, PBO, and PCO)*.
*5. This parameter can be used with the SERVOPACK of SGDV-□□□□□□B. For details, refer to *2. Installation* in *Σ-V Series User's Manual Setup for Rotational Motor* (No.: SIEP S800000 43).

7.2 Viewing Monitor Displays

The monitor display can be checked or viewed in the Parameter/Monitor (-PRM/MON-) window of the digital operator.

The following figure shows four factory settings that are first displayed if viewing monitor displays.

```
BB              －PRM／MON－
Un000＝  00000
Un002＝  00000
Un008＝  00000
Un00D＝00000000
```

← Indicates that the value of Un000 (motor rotating speed) is 0 min^{-1}.

To view any items that are not shown, press the [∧] or [∨] Key to scroll through the list.

Motor rotating speed	Un000 = 00000
	[∨] ↑ ↓ [∧]
Speed reference	Un001 = 00000
	[∨] ↑ ↓ [∧]
Internal torque reference	Un002 = 00000
	[∨] ↑ ↓ [∧]
Rotational angle 1 (encoder pulses from the phase-C origin)	Un003 = 00000
	[∨] ↑ ↓ [∧]
Rotation angle 2 (from polarity origin (electric angle))	Un004 = 00090
	[∨] ↑ ↓ [∧]
	⋮
	[∨] ↑ ↓ [∧]
Feedback pulse counter	Un00D = 00000000

7.3 Monitoring Input Signals

The status of input signals can be checked with the input signal monitor (Un005). The procedure for the method of interpreting the display and a display example are shown below.

7.3.1 Interpreting Input Signal Display Status

The input signal monitor (Un005) can be read in the following way. The upper level indicates OFF, and the lower level indicates ON. All undefined digits are shown in the lower level (ON).

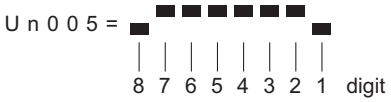

Display LED Number	Input Terminal Name	Signal Name (Factory Setting)
1	CN1-13	SIO
2	CN1-7	P-OT
3	CN1-8	N-OT
4	CN1-9	/DEC
5	CN1-10	/EXT1
6	CN1-11	/EXT2
7	CN1-12	/EXT3
8	–	Reserved

Note: Input signals use the following circuit configuration.
- OFF: Open
- ON: Short-circuited

Example

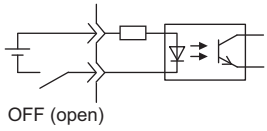

7.3.2 Input Signal Display Example

Input signals are displayed as shown below.

• When the /DEC signal is ON

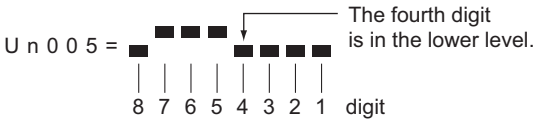

• When the /DEC signal is OFF

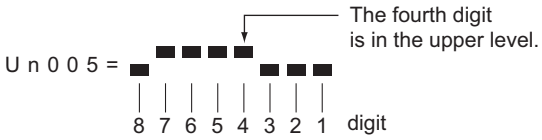

• When the P-OT signal is activated

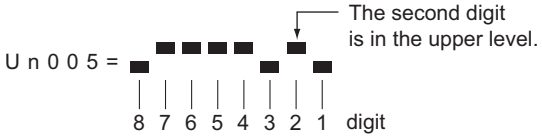

7.4 Monitoring Output Signals

The status of output signals can be checked with the output signal monitor (Un006). The procedure for the method of interpreting the display and a display example are shown below.

7.4.1 Interpreting Output Signal Display Status

The output signal monitor (Un006) can be read in the following way. The upper level indicates OFF, and the lower level indicates ON. All undefined digits are shown in the lower level (ON).

Display LED Number	Output Terminal Name	Signal Name (Factory Setting)
1	CN1-3, -4	ALM
2	CN1-1, -2	/BK
3	CN1-23, -24	SO2
4	CN1-25, -26	SO3
5	–	Reserved
6	–	Reserved
7	–	Reserved
8	–	Reserved

Note: Input signals use the following circuit configuration.
- OFF: Transistor OFF
- ON: Transistor ON

Example

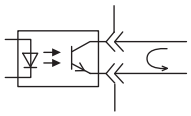

7.4.2 Output Signal Display Example

Output signals are displayed as shown below.

- When the ALM signal is OFF

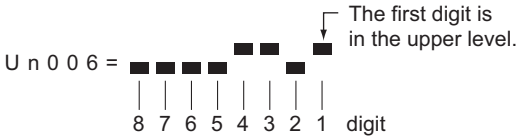

7.5 Monitoring Safety Input Signals

The status of safety input signals can be checked with the safety I/O signal monitor (Un015). The procedure for the method of interpreting the display and a display example are shown below.

7.5.1 Interpreting Safety Input Signal Display Status

The safety I/O signal monitor (Un015) can be read in the following way. The upper level indicates ON, and the lower level indicates OFF. All undefined digits are shown in the lower level (OFF).

Display LED Number	Input Terminal Name	Signal Name
1	CN8-3, -4	/HWBB1
2	CN8-5, -6	/HWBB2
3	–	Reserved
4	–	Reserved
5	–	Reserved
6	–	Reserved
7	–	Reserved
8	–	Reserved

Note: Input signals use the following circuit configuration.
- OFF: Open
- ON: Short-circuited

Example

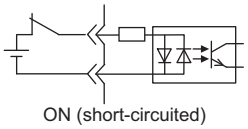

7.5.2 Safety Input Signal Display Example

Safety input signals are displayed as shown below.

- When the /HWBB1 signal turns OFF to activate the HWBB function

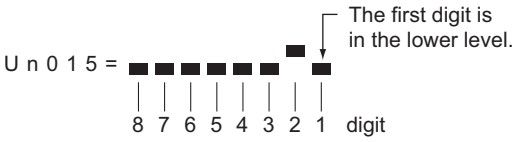

8

Fully-closed Loop Control

8.1 System Configuration and Connection Example for SERVOPACK with Fully-closed Loop Control 8-2

8.1.1 System Configuration 8-2
8.1.2 Internal Block Diagram of Fully-closed Loop Control 8-3
8.1.3 Serial Converter Unit 8-4
8.1.4 Example of Connections to External Encoders 8-6
8.1.5 Encoder Output Pulse Signals from SERVOPACK with an External Encoder by Renishaw plc 8-7
8.1.6 Precautions When Using an External Incremental Encoder by Magnescale 8-8

8.2 SERVOPACK Startup Procedure 8-11

8.3 Parameter Settings for Fully-closed Loop Control 8-13

8.3.1 Motor Rotation Direction 8-14
8.3.2 Sine Wave Pitch (Frequency) for an External Encoder 8-16
8.3.3 Setting Encoder Output Pulses (PAO, PBO, and PCO) 8-16
8.3.4 External Absolute Encoder Data Reception Sequence 8-17
8.3.5 Electronic Gear 8-20
8.3.6 Alarm Detection 8-21
8.3.7 Analog Monitor Signal 8-22
8.3.8 Speed Feedback Method during Fully-closed Loop Control 8-22

8.1 System Configuration and Connection Example for SERVOPACK with Fully-closed Loop Control

This section describes the system configuration and connection example for the SERVOPACK with fully-closed loop control.

8.1.1 System Configuration

The following figure shows an example of the system configuration.

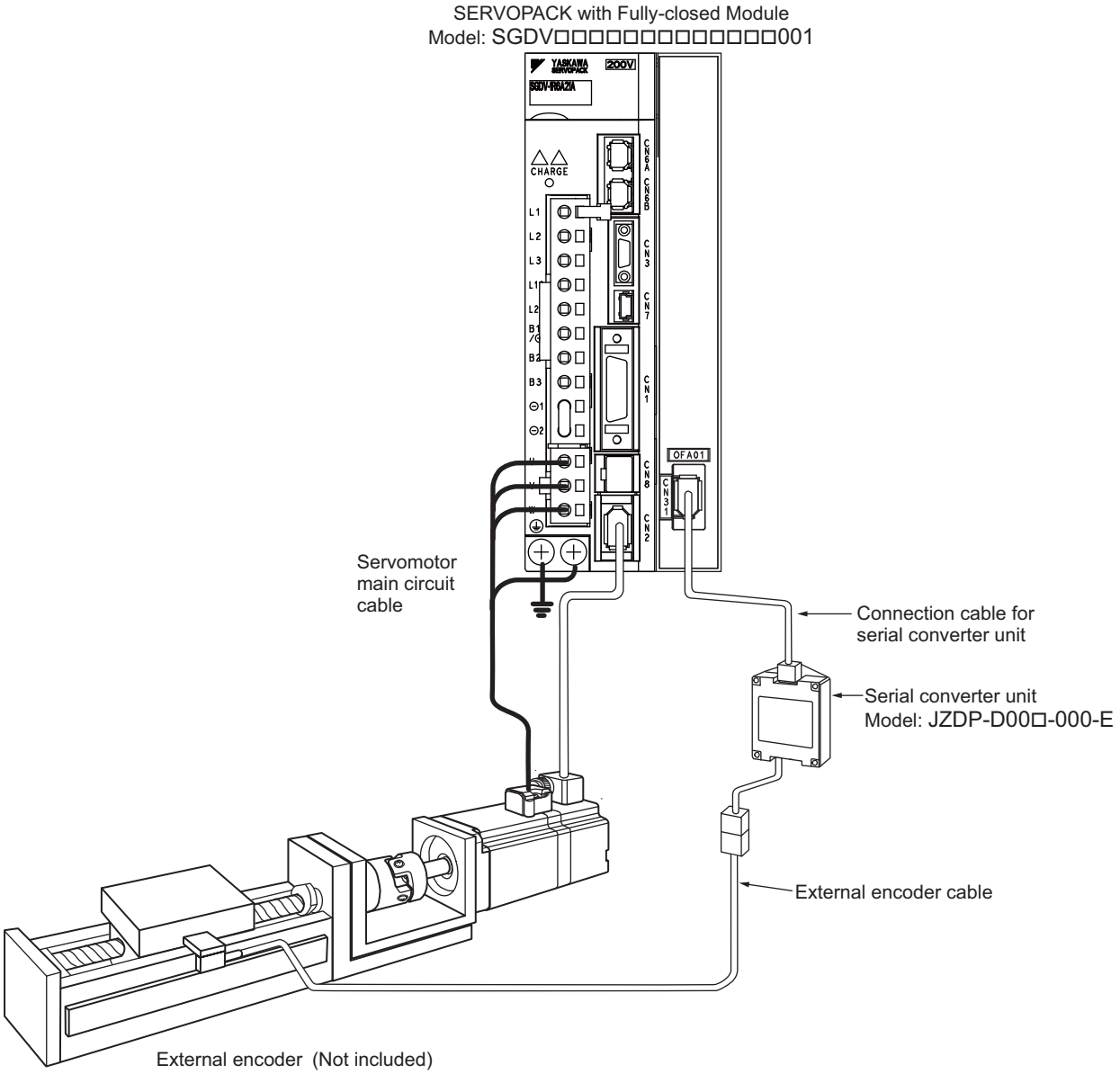

Note 1. The figure above shows a connection example of an external encoder. Refer to *1.5 Examples of Servo System Configurations* for details on the power supply and peripheral devices.

2. In fully-closed loop control, rattling or twisting of mechanical parts may cause vibration, delaying the positioning process.

8.1.2 Internal Block Diagram of Fully-closed Loop Control

Internal block diagram of fully-closed loop control is shown below.

■ With Position Control

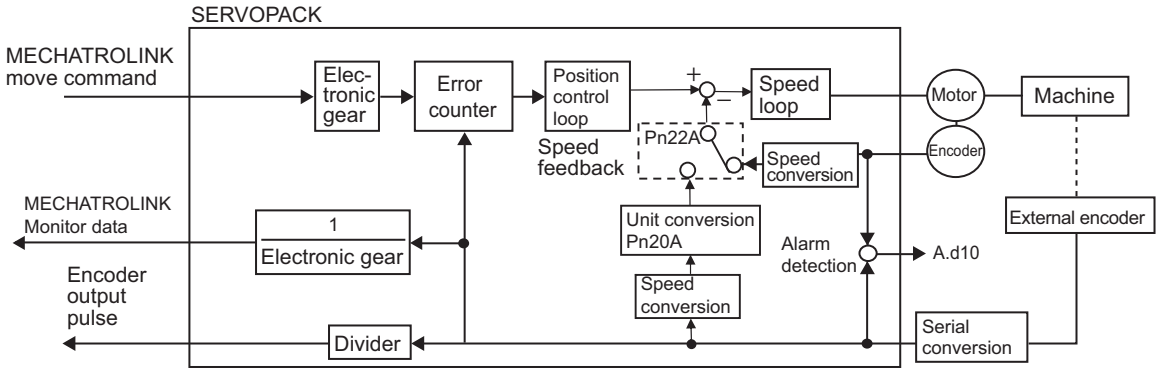

Note: Either an incremental or an absolute encoder can be used. When the absolute encoder is used, set 1 to Pn002.2 (use the absolute encoder as an incremental encoder).

■ With Speed Control

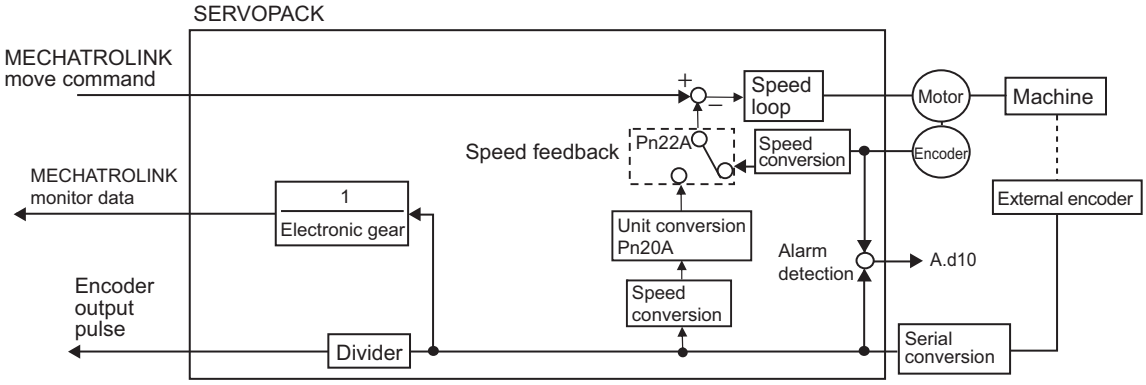

8.1.3 Serial Converter Unit

This section provides the specification of the serial converter unit.

(1) Model: JZDP-D00□-□□□-E

■ Characteristics and Specifications

Items		Specifications
Electrical Characteristics	Power Supply Voltage	+5.0 V±5%, ripple content 5% max.
	Current Consumption *1	120 mA Typ. 350 mA max.
	Signal Resolution	1/256 pitch (1 cycle) of input 2-phase sine wave pitch
	Max. Response Frequency	250 kHz
	Analog Input Signals *2 (cos, sin, Ref)	Differential input amplitude: 0.4 V to 1.2 V Input signal level: 1.5 V to 3.5 V
	Output Signal *3	Position data, alarms
	Output Method	Serial data communications
	Output Circuit	Balanced type transceiver (SN75LBC176 or the equivalent), internal terminating resistor: 120 Ω
Mechanical Characteristics	Approx. Mass	150 g
	Vibration Resistance	98 m/s^2 max. (10 to 2500 Hz) in three directions
	Shock Resistance	980 m/s^2, (11 ms) two times in three directions
Environmental Conditions	Surrounding air Temperature	0 °C to 55 °C
	Storage Temperature	-20°C to +80 °C
	Humidity	20% to 90%RH (without condensation)
	Altitude	1000 m max.

* 1. The current consumption of the external encoder is not included in this value.
The current consumption of the external encoder must be taken into consideration for the current capacity of host controller that supplies the power.
* 2. Input a value within the specified range. Otherwise, incorrect position information is output, and the device may be damaged.
* 3. The transmission is enabled 100 to 300 ms after the power turns ON.

(2) Analog Signal Input Timing

Input the analog signals with the timing shown in the following figure.

The /cos and /sin signals are the differential signals when the cos and sin signals are shifted 180°. The specifications of the cos, /cos, sin, and /sin signals are identical except for the phases.

The Ref and /Ref signals are input to the comparator. Input a signal that will exceed the hysteresis of the comparator (i.e., the broken lines in the following figure).

When they are crossed, the output data will be counted up.

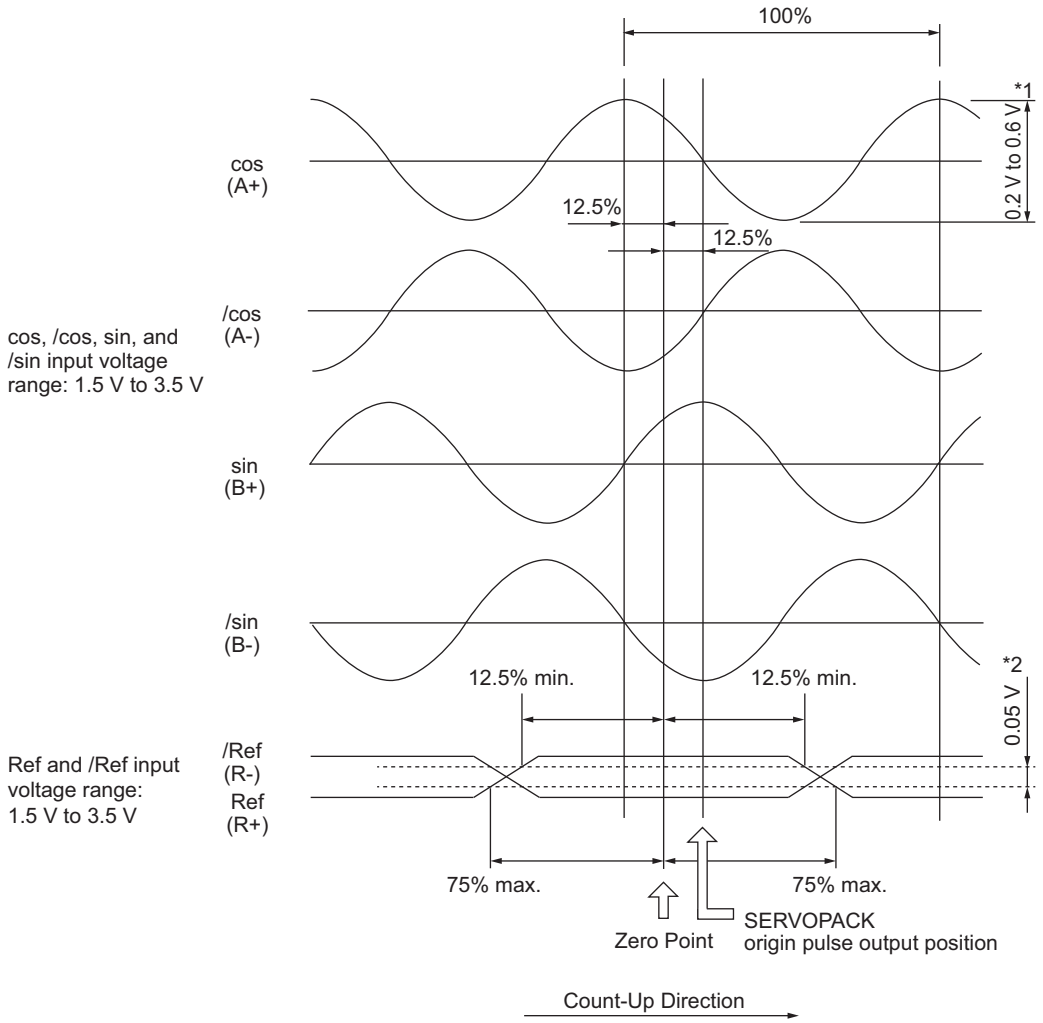

∗1. If the analog signal amplitude declines to approximately 0.35 V because of the differential amplitude, the serial converter unit will output an alarm.
∗2. This is the hysteresis width.

IMPORTANT

- Never perform insulation resistance and withstand voltage tests.
- When low-voltage analog signals are input to the serial converter unit, noise influence on the analog signals affects the unit's ability to output correct position information. The analog cable must be as short as possible and shielded.
- Use the serial converter unit in a location without gases such as H_2S.
- Do not connect or disconnect the unit while power is being supplied, or the unit may be damaged.
- When using multiple axes, use a shielded cable for each axis. Do not use a shielded cable for multiple axes.
- If you use any external encoder other than a recommended external encoder, evaluate the system in advance before you use it.

8.1.4 Example of Connections to External Encoders

(1) External Encoder by Heidenhain

■ Model: LIDA□8□, LIF48□

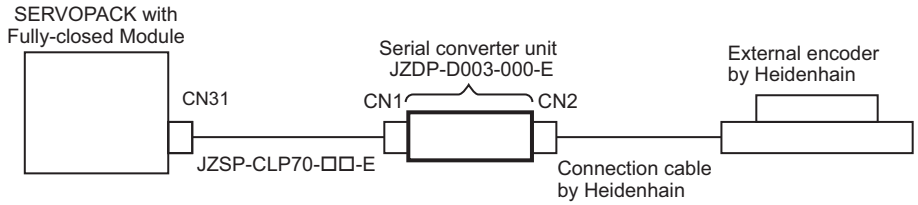

■ Model: LIC4100-series Model

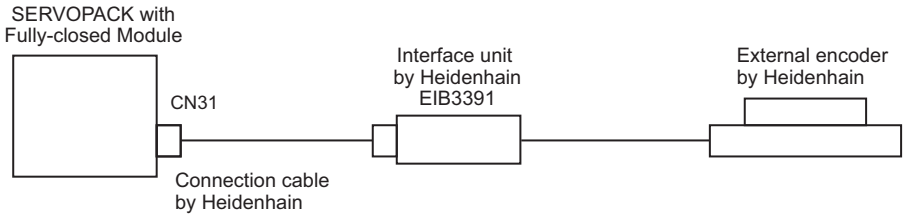

(2) External Encoder by Renishaw plc

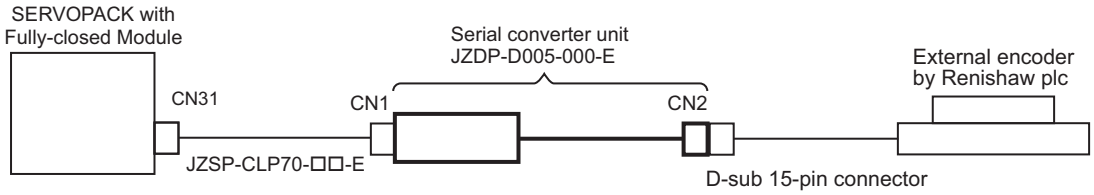

(3) External Encoder by Mitutoyo Corporation

The serial converter unit is not needed when using the external encoder made by Mitutoyo Corporation. This external encoder is an absolute encoder.

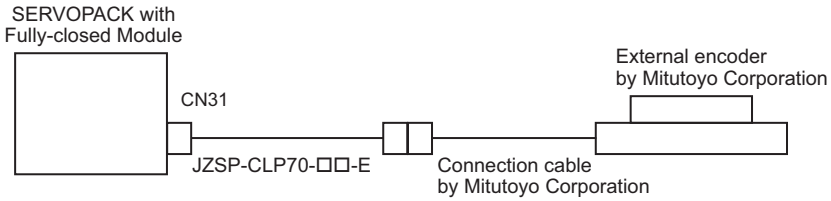

(4) External Encoder by Magnescale Co., Ltd.

■ Model: SR75, SR85, SR77*1, SR87*1, RU77*2

The serial converter unit is not needed when using the external encoder made by Magnescale Co., Ltd.

*1. The SR77 and SR87 models are external absolute encoder.
*2. The RU77 is rotational external absolute encoder.

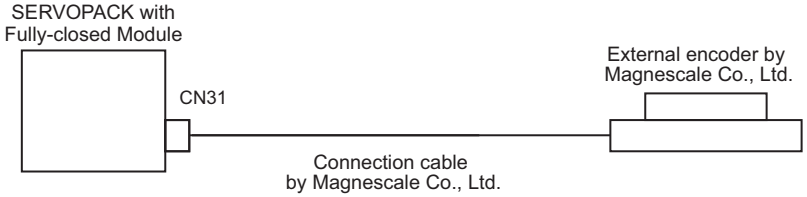

■ Model: SL700, SL710, SL720, SL730

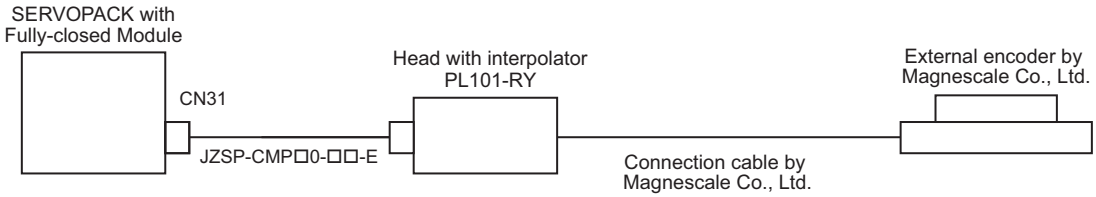

8.1.5 Encoder Output Pulse Signals from SERVOPACK with an External Encoder by Renishaw plc

The output position of the zero point signal (Ref) will depend on the direction of movement for some models of external encoders by Renishaw plc.
In such case, the phase-C pulses of the SERVOPACK are output at two positions.
For details on the specifications of the zero-point signals for a external encoder, refer to the manual for the Renishaw external encoder.

(1) When Passing 1st Zero Point Signal (Ref) in Forward Direction and Returning after Power ON

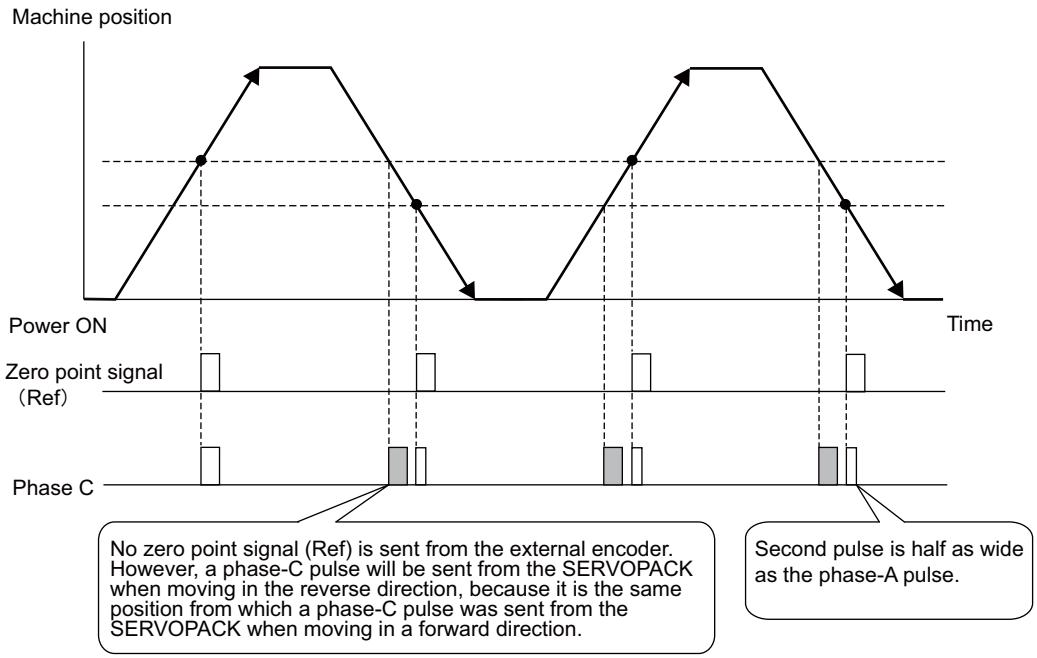

(2) When Passing 1st Zero Point Signal (Ref) in Reverse Direction and Returning after Power ON

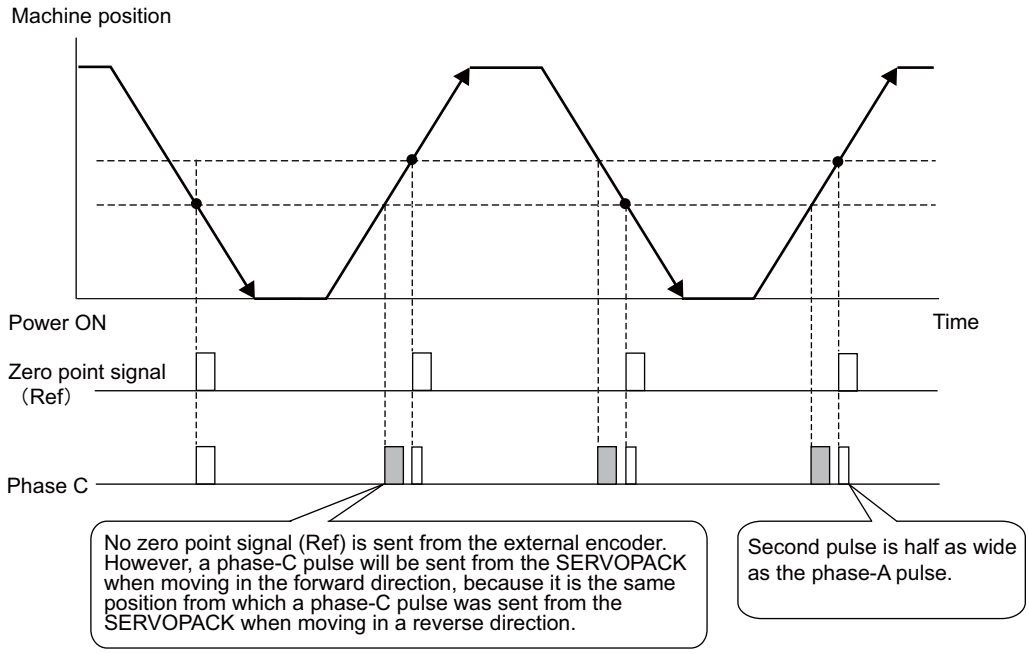

8.1.6 Precautions When Using an External Incremental Encoder by Magnescale

When an external incremental encoder by Magnescale Co., Ltd. is used, the count direction of the encoder determines if a phase-C pulse (CN1-21, CN1-22) is output and counted.

Note: The count direction (counting up or down) of the encoder determines if a phase-C pulse is output. The output of the pulse does not depend on the settings of these parameters: Pn000.0 (motor rotational direction) and Pn002.3 (external encoder usage method).

Model	Interpolator	Scale pitch (μm)
SL710	PL101-RY	800
SL720		800
SL730		800
SR75		80
SR85		80

■ When Passing 1st Zero Point in Forward Direction and Returning after Power ON

After the power is turned on, the phase-C pulse (CN1-21, CN1-22) is output when the external encoder moves forward and its detection head first passes the phase-C detection position. After the detection head of the encoder passes the detection position in a forward direction, the phase-C pulse is output when the head passes the position regardless of the direction of the encoder's movement.

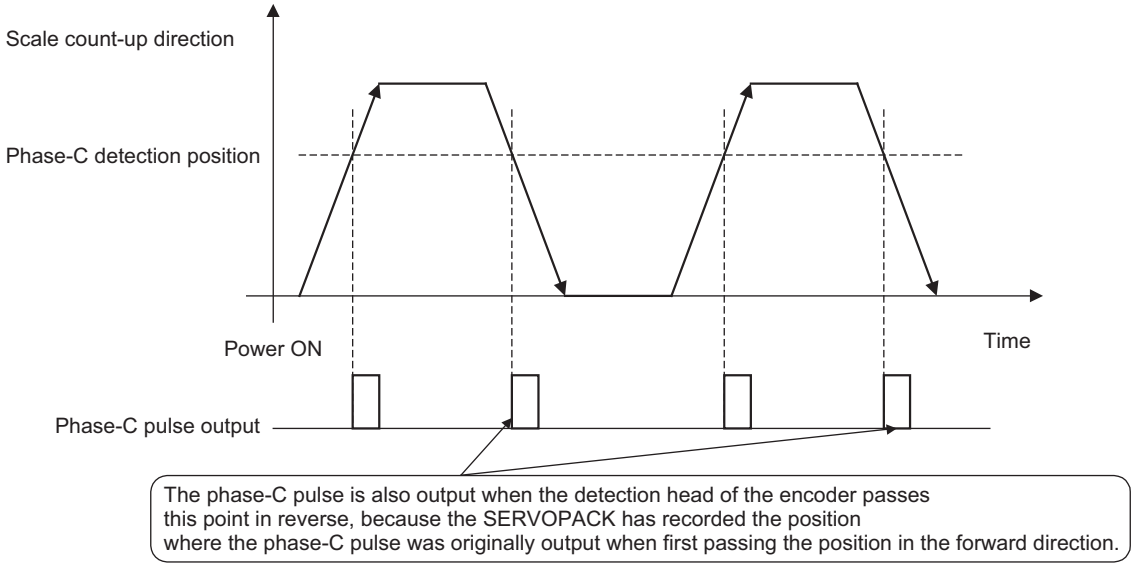

■ When Passing 1st Zero Point in Reverse Direction and Returning after Power ON

After the power is turned on, the phase-C pulse (CN1-21, CN1-22) is not output when the external encoder moves reverse and its head first passes the phase-C detection position. The phase-C pulse is output for the first time when the external encoder moves forward and its head passes the detection position. After the detection head of the encoder first passes the detection position in the forward direction, the phase-C pulse is output when the head passes the position regardless of the direction of the encoder's movement.

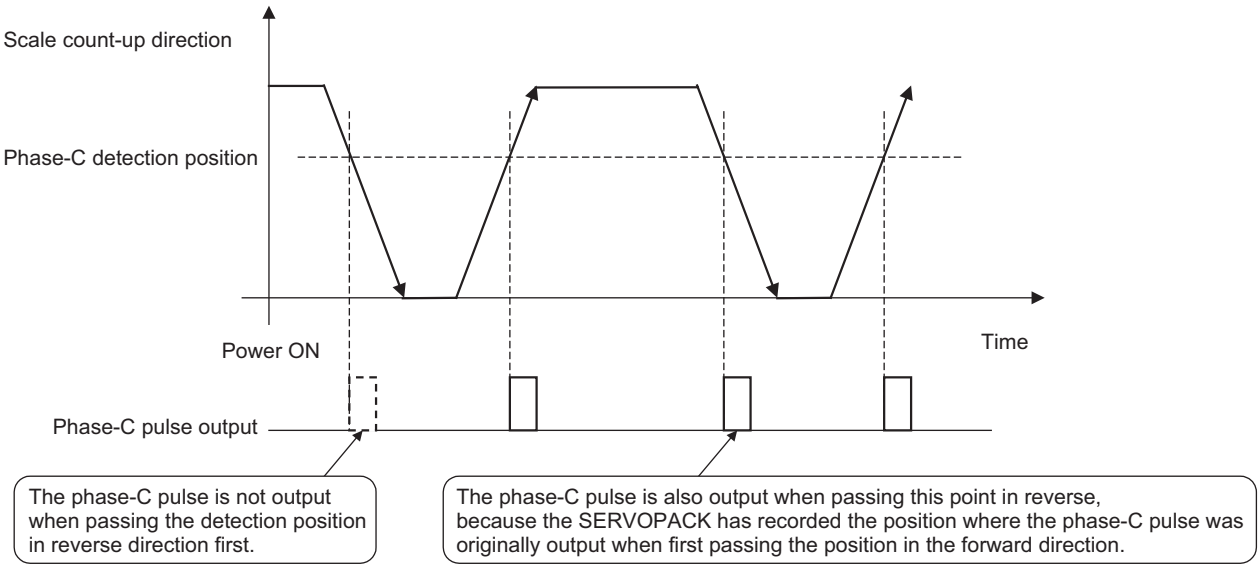

■ When Using an External Encoder with Multiple Zero Points and Passing 1st Zero Point in Forward Direction and Returning after Power ON

When using an external encoder with multiple zero points, the same logic as that explained earlier for an encoder with only one zero point applies to each zero point.
See ■ *When Passing 1st Zero Point in Forward Direction and Returning after Power ON.*

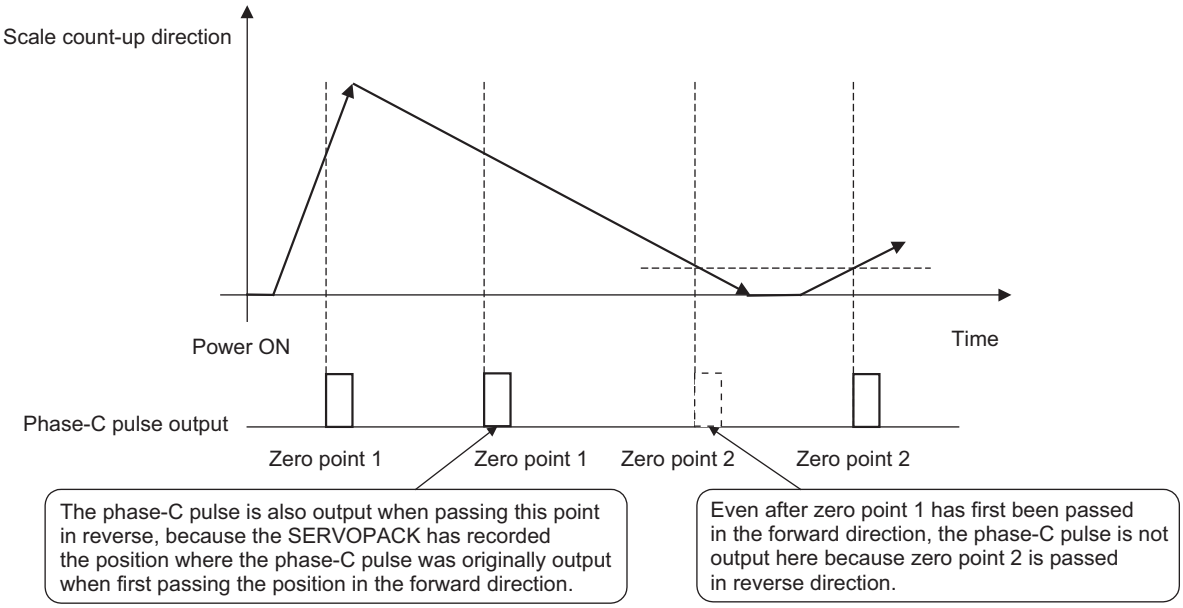

■ When Using an External Encoder with Multiple Zero Points and Passing 1st Zero Point in Reverse Direction and Returning after Power ON

When using an external encoder with multiple zero points, the same logic as that explained earlier for an encoder with only one zero point applies to each zero point.
See ■ *When Passing 1st Zero Point in Reverse Direction and Returning after Power ON*.

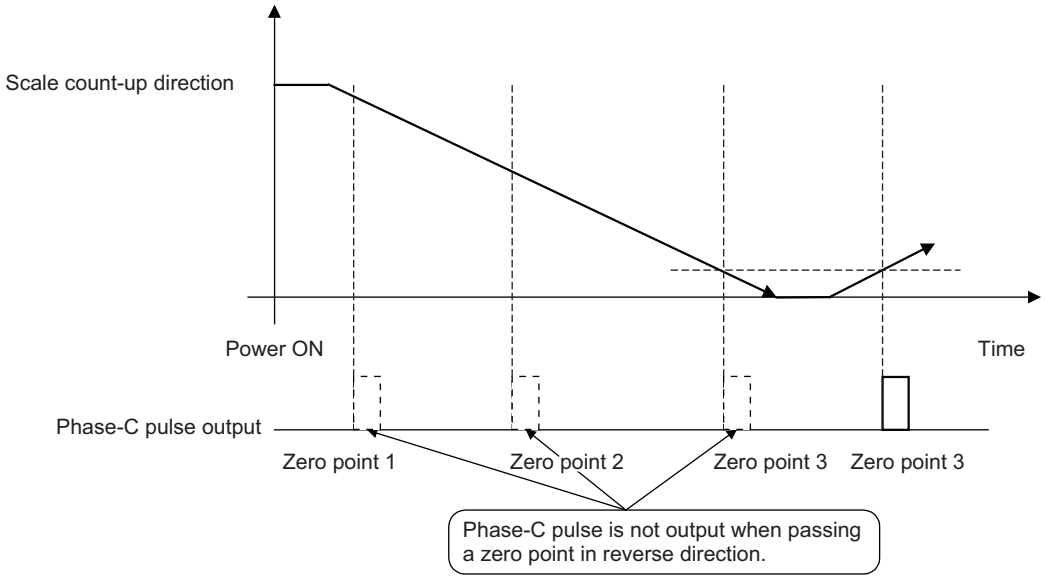

To output the phase-C pulse when a detection point is passed in reverse, set the following parameter to 1.

Parameter		Meaning	When Enabled	Classification
Pn081	n.□□□0 [Factory Setting]	Outputs phase-C pulse only in forward direction.	After restart	Setup
	n.□□□1	Outputs phase-C pulse in forward and reverse direction.		

Note: A SERVOPACK with software version 0023 or later supports this parameter.

IMPORTANT

- Setting of Pn081.0

  Do not change the factory setting if the zero point position of the existing equipment must remain as is.
  - When Pn081.0 = 1, the width of the phase-C pulse output is narrower than that of the phase-A pulse in some cases.
  - As shown in the following figure, there is a one-eighth scale pitch difference in positions between the two settings (Pn081.0 = 1 and Pn081.0 = 0) for the phase-C pulse output, the zero point return command, and the phase-C detection by phase-C latch function.

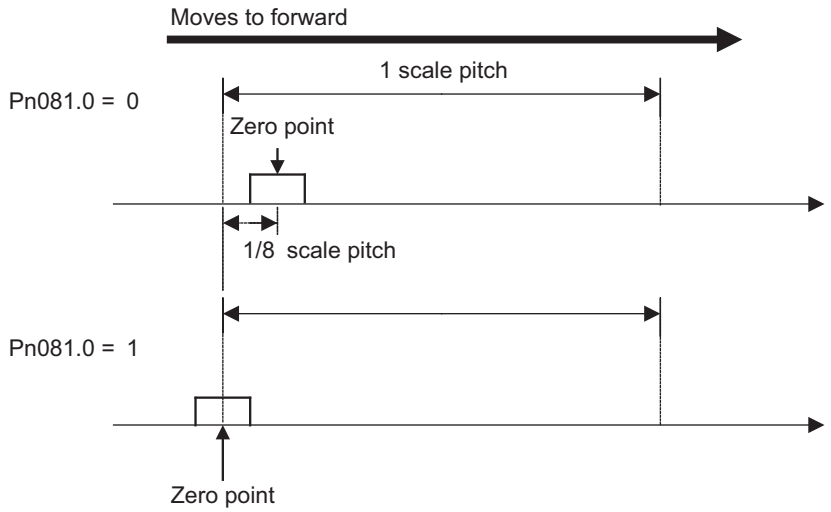

8.2 SERVOPACK Startup Procedure

First check that the SERVOPACK operates correctly with semi-closed loop control, then check that it operates correctly with fully-closed loop control.
The following describes the startup procedure for the SERVOPACK in fully-closed loop control.

Procedure	Description	Operation	Parameters Requiring Settings	Controller
1	Check operation of the whole sequence in semi-closed loop control and without any load. Items to Check • Power supply circuit wiring • Servomotor wiring • Encoder wiring • Wiring of I/O signal lines from the host controller • Servomotor rotation direction, speed, and number of rotations • Operation of safety mechanisms, such as the brakes and the overtravel mechanism	Set the parameters so that the SERVOPACK operates correctly in semi-closed loop control (Pn002.3 = 0) without any load and check the following points. • Is there an error with the SERVOPACK? • Does the JOG operation operate correctly when operating the SERVOPACK in standalone mode? • Do the I/O signals turn ON/OFF correctly? • Does the servomotor turn ON when the SV_ON command is sent from the host controller? • Does the servomotor operate correctly when the position reference is input by the host controller?	• Basic Function Select Switch 0 (Pn000) • Application Function Select Switch 1 (Pn001) • External Encoder Usage (Pn002.3) • Electronic Gear Ratio (Numerator) (Pn20E) • Electronic Gear Ratio (Denominator) (Pn210) • Input Signal Selection (Pn50A, Pn50B, Pn511) • Output Signal Selection (Pn50E, Pn50F, Pn510)	SERVOPACK or host controller
2	Check operation of the system connected with the machine and servomotor in semi-closed loop control mode. Items to Check • Initial responsiveness of the system connected with the machine • Movement direction, distance, and speed of the machine specified by the host controller	Connect the servomotor to the machine. Set the moment of inertia ratio (Pn103) using the advanced autotuning function. Check that the machine operates in the correct direction, distance, and speed as directed by the host controller.	• Moment of inertia ratio (Pn103)	Host controller
3	Check the external encoder. Item to Check • Are signals from the external encoder received correctly?	Set parameters related to the fully-closed loop control and move the machine with your hand without turning ON the power supply to the servomotor. Check the following status with the digital operator or SigmaWin+. • Does the fully-closed feedback pulse counter (Un00E) count up when the servomotor moves in the forward direction? • Is the distance the machine moved about visually the same as the amount counted by the fully-closed feedback pulse counter (Un00E)? Note: The unit for fully-closed feedback pulse counter (Un00E) is one pulse, which is equivalent to the external encoder sine wave pitch divided by the number of divisions*. * Refer to *8.3.5 Electronic Gear* for details on the number of divisions.	• External Encoder Usage (Pn002.3) • Number of External Scale Pitch (Pn20A) • Electronic Gear Ratio (Numerator) (Pn20E) • Electronic Gear Ratio (Denominator) (Pn210) • Encoder Output Resolution (Pn281) • Excessive Error Level Between Servomotor and Load Positions (Pn51B) • Positioning Completed Width (Pn522) • Multiplier per One Fully-closed Rotation (Pn52A)	–

(cont'd)

Procedure	Description	Operation	Parameters Requiring Settings	Controller
4	Perform a program JOG operation. Items to Check • Does the fully-closed loop control operate correctly when operating the SERVOPACK in standalone mode?	Perform a program JOG operation and check that the distance that the servomotor moved is the same as the distance that is set in Pn531. Note: Start from a low speed and gradually increase the speed.	• Program JOG related parameters (Pn530 to Pn536)	SERVOPACK
5	Operate the SERVOPACK. Items to Check • Does the fully-closed loop control operate correctly including the host controller?	Input the position reference and check that the SERVOPACK operates correctly. Note: Start from a low speed and gradually increase the speed.	–	Host controller

8.3 Parameter Settings for Fully-closed Loop Control

This section describes the parameter settings for fully-closed loop control.

Set Parameters	Setting Contents	Position Control	Speed Control	Torque Control	Reference
Pn000.0	Motor rotation direction	○	○	○	8.3.1
Pn002.3	External encoder usage method	○	○	○	
Pn20A	Number of pitches for the external encoder	○	○	○	8.3.2
Pn281	Number of encoder output pulses (PAO, PBO, and PCO) from the SERVOPACK	○	○	○	8.3.3
–	External absolute encoder data reception sequence	○	○	○	8.3.4
Pn20E, Pn210	Electronic gear ratio	○	–	–	8.3.5
Pn51B	Excessive error level between servo-motor and load positions	○	–	–	8.3.6
Pn52A	Multiplier per one fully-closed rota-tion	○	–	–	
Pn006/Pn007	Analog monitor signal	○	○	○	8.3.7
Pn22A	Speed feedback method during fully-closed loop control	○	–	–	8.3.8

Note: When using an external absolute encoder, this external encoder works as an absolute encoder even if Pn002.2 is set to 1.

Parameter		Meaning	When Enabled	Classification
Pn002	n.□0□□ [Factory setting]	Uses the absolute encoder as an absolute encoder.	After restart	Setup
	n.□1□□	Uses the absolute encoder as an incremental encoder.		

8.3.1 Motor Rotation Direction

The motor rotation direction can be set. To perform fully-closed loop control, it is necessary to set the motor rotation direction with both Pn000.0 (motor rotation direction) and Pn002.3 (external encoder usage).

(1) Setting Parameter Pn000.0

The standard setting for forward rotation is counterclockwise (CCW) as viewed from the load end of the servomotor.

Parameter		Forward/ Reverse Reference	Direction of Motor Rotation and Encoder Output Pulse	Applicable Overtravel (OT)
Pn000	n.□□□0 Sets CCW as forward direction. [Factory setting]	Forward Reference	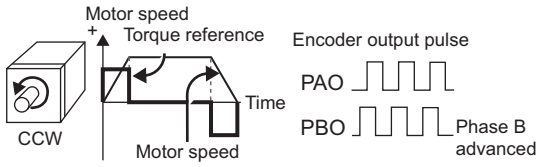	P-OT
		Reverse Reference	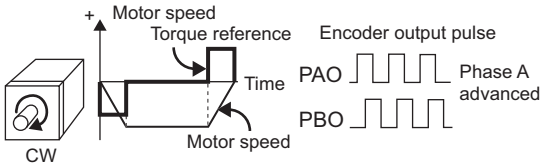	N-OT
	n.□□□1 Sets CW as forward direction. (Reverse Rotation Mode)	Forward Reference	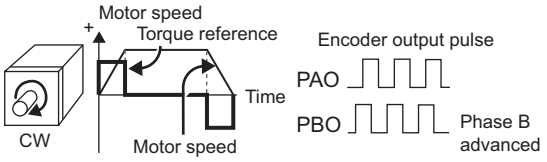	P-OT
		Reverse Reference	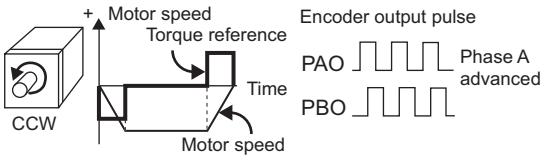	N-OT

Note: SigmaWin+ trace waveforms are shown in the above table.

(2) Setting Parameter Pn002.3

Parameter		Name	Meaning	When Enabled	Classification
Pn002	n.0□□□ [Factory setting]	External Encoder Usage	Do not use external encoder.*	After restart	Setup
	n.1□□□		Uses external encoder in forward rotation direction.		
	n.2□□□		Reserved (Do not change.)		
	n.3□□□		Uses external encoder in reversed rotation direction.		
	n.4□□□		Reserved (Do not change.)		

* The mode will be switched to semi-closed position control if Pn002.3 is set to 0.

(3) Relation between Motor Rotation Direction and External Encoder Pulse Phases

Refer to the table below.

Parameter			Pn002.3 (External Encoder Usage)			
			1		3	
Pn000.0 (Motor rotation direction)	0	Reference direction	Forward reference	Reverse reference	Forward reference	Reverse reference
		Motor rotation direction	CCW	CW	CCW	CW
		External encoder output	cos lead	sin lead	sin lead	cos lead
		Encoder output pulse	Phase B lead	Phase A lead	Phase B lead	Phase A lead
	1	Reference direction	Forward reference	Reverse reference	Forward reference	Reverse reference
		Motor rotation direction	CW	CCW	CW	CCW
		External encoder output	sin lead	cos lead	cos lead	sin lead
		Encoder output pulse	Phase B lead	Phase A lead	Phase B lead	Phase A lead

- Set Pn002.3 to 1 (forward rotation with forward reference) if the output of the external encoder is cos lead and the motor is turning counterclockwise; set Pn002.3 to 3 (reverse rotation with forward reference) if it is sin lead. When Pn000.0 is set to 0 and Pn002.3 to 1, manually turn the motor shaft counterclockwise. If the fully-closed feedback pulse counter (Un00E) counts up, set Pn002.3 to 1. If the Un00E counts down, set Pn002.3 to 3.
- The output pulses are phase-B advanced if the motor is turning forward regardless of the setting in Pn000.0.

8.3.2 Sine Wave Pitch (Frequency) for an External Encoder

Set the number of external encoder pitches per motor rotation to Pn20A.

Pn20A is the speed conversion coefficient when the external encoder is used as speed feedback.

(1) Setting Example

Specifications
External encoder sine wave pitch: 20 µm
Ball screw lead: 30 mm

If the external encoder is connected directly to the motor, the set value will be 1500 (30 mm/0.02 mm = 1500).

Note 1. If there is a fraction, round off the digits below the decimal point.
2. If the number of external encoder pitches per motor rotation is not an integer, there is some error in the speed loop. This is not relevant for the position loop however, therefore it does not interfere with the position accuracy.

(2) Related Parameter

Pn20A	Number of External Scale Pitch		Position		Classification
	Setting Range	Setting Unit	Factory Setting	When Enabled	
	4 to 1048576	1 pitch/rev	32768	After restart	Setup

8.3.3 Setting Encoder Output Pulses (PAO, PBO, and PCO)

Set the position resolution to Pn281. Set the number of phase A and phase B edges.

(1) Setting Example

Specifications
External encoder sine wave pitch: 20 µm
Ball screw lead: 30 mm
Speed: 1600 mm/s

If the output of a single pulse (multiplied by 4) is 1 µm, the set value will be 20.

If the output of a single pulse (multiplied by 4) is 0.5 µm, the set value will be 40.

The encoder output pulse will have the following waveform if the set value is 20.

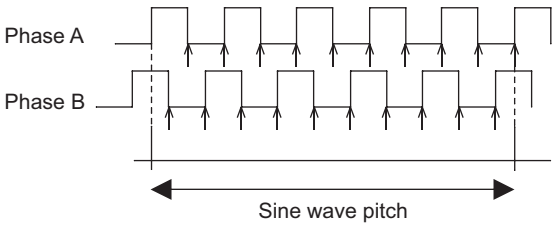

"↑" shows the edge position. In this example, the set value is 20 therefore the number of ↑ is 20.

Note: The upper limit of the encoder signal output frequency (multiplied by 4) is 6.4 Mpps. Do not set a value that would cause the output to exceed 6.4 Mpps. If the output exceeds the upper limit, the overspeed of encoder output pulse rate alarm (A.511) will be output.

Example:
The frequency is as follows if the set value is 20 and the speed is 1600 mm/s:

$$\frac{1600\ \text{mm/s}}{0.001\ \text{mm}} = 1600000 = 1.6\ \text{Mpps}$$

Because 1.6 Mpps is less than 6.4 Mpps, this value can be used.

(2) Related Parameter

Pn281	Encoder Output Resolution		Position		Classification
	Setting Range	Setting Unit	Factory Setting	When Enabled	
	1 to 4096	1 edge/pitch	20	After restart	Setup

Note: The maximum setting for the encoder output resolution is 4096. When the number of divisions on the external encoder is more than 4096, the data shown in *8.3.5 ■External Encoder Sine Wave Pitch and Number of Divisions* is no longer applicable.

(3) Phase-C Pulse Output Specifications

The pulse width of phase C (origin pulse) varies according to the encoder output resolution (Pn281), and will become the same as the pulse width of phase A.

Output timing for the phase-C pulse is one of the following.

- In synchronization with the phase-A rising edge
- In synchronization with the phase-A falling edge
- In synchronization with the phase-B rising edge
- In synchronization with the phase-B falling edge

IMPORTANT

Phase C of the rotational external absolute encoder is output only at the encoder's first point of origin after the power is supplied. Phase C of the external encoder is not output every rotation.

8.3.4 External Absolute Encoder Data Reception Sequence

The sequence in which the SERVOPACK receives outputs from the external absolute encoder and transmits them to host controller in fully-closed loop control is shown below.

(1) Outline of Absolute Signals

The serial data, pulses, etc., of the external absolute encoder that are output from the SERVOPACK are output from the PAO, PBO, and PCO signals as shown below.

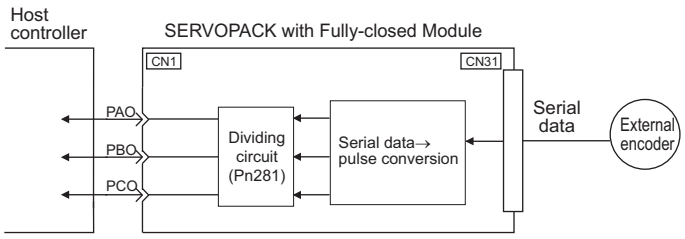

Signal Name	Status	Contents
PAO	At initialization	Serial data Initial incremental pulses
	Normal Operations	Incremental pulses
PBO	At initialization	Initial incremental pulses
	Normal Operations	Incremental pulses
PCO	Always	Origin pulses

Note: When host controller receives the data from the external absolute encoder, do not perform counter reset using the output of PCO signal.

(2) Absolute Data Transmission Sequence and Contents

1. Send the Turn Sensor ON (SENS_ON) command from the host controller.
2. After 100 ms, set the system to serial data reception-waiting-state. Clear the incremental pulse up/down counter to zero.
3. Receive eight characters of serial data.
4. The system enters a normal incremental operation state about 400 ms after the last serial data is received.

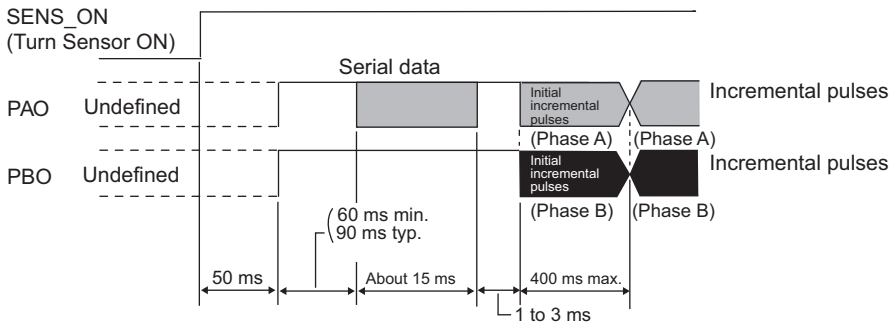

Serial data:
The current position pulses divided by Pn281 are output in serial data.
One serial data is a value equivalent to 1048576 pulses.

Initial incremental pulses:
The current position pulses divided by Pn281 are output in pulses. The number of output pulses is between 0 to 1048576, and the output speed is approximately 1.48 µs per pulse.

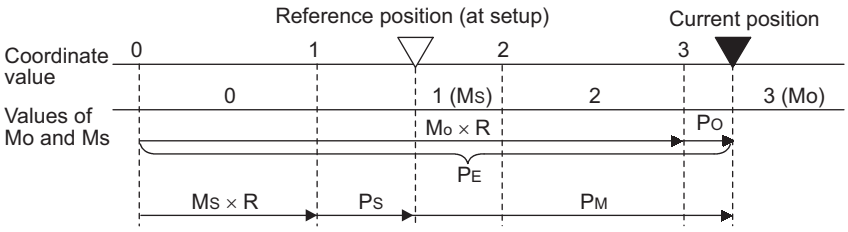

Final absolute data P_M is calculated by following formula.

$P_E = M_O \times R + P_O$

$P_M = P_E - M_S \times R - P_S$

Signal	Meaning
P_E	Current position of external encoder
M_O	Serial data of current position
P_O	Number of initial incremental pulses of current position
M_S	Serial data of reference position
P_S	Number of initial incremental pulses of reference position
P_M	Current value required for the user's system
R	1048576

Note: If host controller receives the data from the external absolute encoder, do not perform counter reset using the output of PCO signal.

(3) Serial Data Specifications

The serial data is output from the PAO signal.

Data Transfer Method	Start-stop Synchronization (ASYNC)
Baud rate	9600 bps
Start bits	1 bit
Stop bits	1 bit
Parity	Even
Character code	ASCII 7-bit code
Data format	8 characters, as shown below. 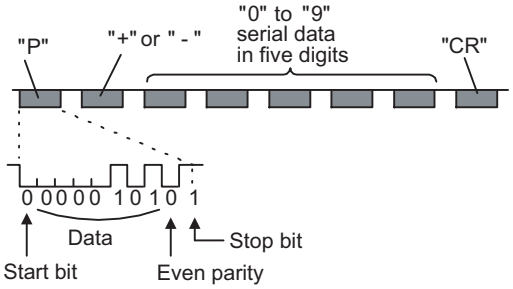 Note: 1. Data is "P+00000" (CR) or "P-00000" (CR) when the position is zero. 2. The serial data range is "-32768" to "+32767". When this range is exceeded, the data changes from "+32767" to "-32678" or from "-32768" to "+32767." When changing multiturn limit, the range changes. For details, refer to *4.7.6 Multiturn Limit Setting*.

(4) Transferring Alarm Contents

If an external absolute encoder is used, the contents of alarms detected by the SERVOPACK are transmitted in serial data to the host controller from the PAO output when the Turn Sensor OFF command (SENS_OFF) is received.

Note: The SENS_OFF command cannot be received while the servomotor power is ON.

Output example of alarm contents are as shown below.

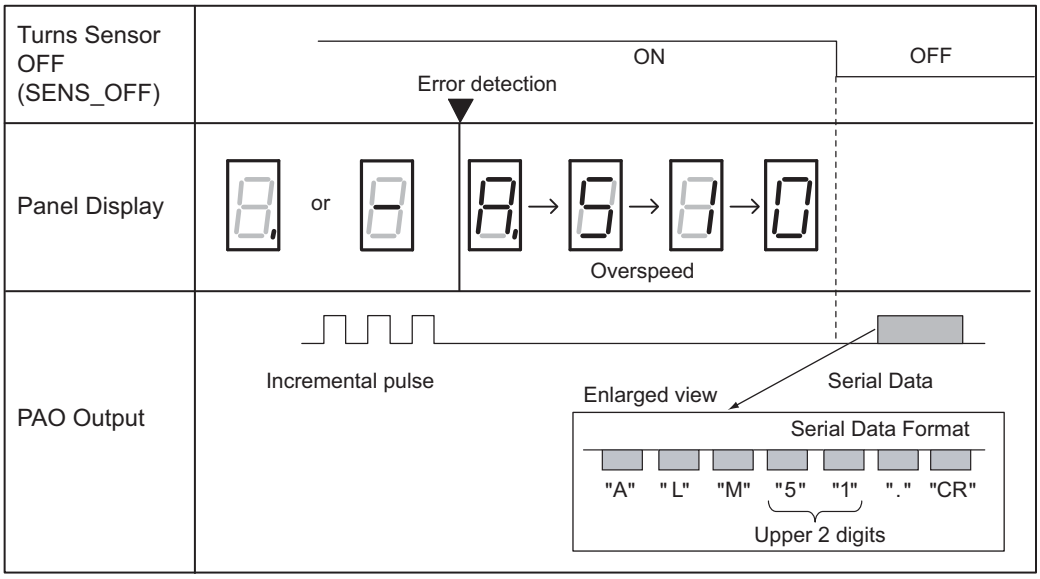

8.3.5 Electronic Gear

Refer to *4.4.3 Electronic Gear* for the purpose of setting the electronic gear.
The following formula is used to calculate the electronic gear ratio in fully-closed loop control.

$$\text{Electronic gear ratio } \frac{B}{A} = \frac{Pn20E}{Pn210} = \frac{\text{Travel distance per reference unit} \times \text{Number of divisions}}{\text{External encoder sine wave pitch}}$$

Note: Set Pn20E (numerator B) and Pn210 (denominator A) to integral values.

The setting range is defined by $0.001 \leq \frac{B}{A} \leq 4000$.

The following table shows the various external encoder sin wave pitches and the number of divisions.

■ External Encoder Sine Wave Pitch and Number of Divisions

Calculate the electronic gear ratio with the values in the following table.

Type of External Encoder	Manufacturer	External Encoder Model	Sine Wave Pitch [μm]	Model of Relay Device between SERVOPACK and External Encoder	Number of Divisions	Resolution
Incremental	Heidenhain	LIDA48□	20	JZDP-D003-□□□-E*1	256	0.078 μm
		LIDA18□	40	JZDP-D003-□□□-E*1	256	0.156 μm
		LIF48□	4	JZDP-D003-□□□-E*1	256	0.016 μm
	Renishaw plc	RGH22B	20	JZDP-D005-□□□-E*1	256	0.078 μm
	Magnescale Co., Ltd.	SR75-□□□□□LF*2	80	–	8192	0.0098 μm
		SR75-□□□□□MF	80	–	1024	0.078 μm
		SR85-□□□□□LF*2	80	–	8192	0.0098 μm
		SR85-□□□□□MF	80	–	1024	0.078 μm
		SL700*2, SL710*2, SL720*2, SL730*2	800	PL101-RY*3	8192	0.0977 μm
Absolute	Heidenhain	LIC4100	20.48	EIB3391Y*4	4096	0.005 μm
	Mitutoyo Corporation	ST781A/ST781AL	256	–	512	0.5 μm
		ST782A/ST782AL	256	–	512	0.5 μm
		ST783/ST783AL	51.2	–	512	0.1 μm
		ST784/ST784AL	51.2	–	512	0.1 μm
		ST788A/ST788AL	51.2	–	512	0.1 μm
		ST789A/ST789AL*5	25.6	–	512	0.05 μm
	Magnescale Co., Ltd.	SR77-□□□□□LF*2	80	–	8192	0.0098 μm
		SR77-□□□□□MF	80	–	1024	0.078 μm
		SR87-□□□□□LF*2	80	–	8192	0.0098 μm
		SR87-□□□□□MF	80	–	1024	0.078 μm
		RU77-4096ADF*6	–	–	256	20 bits
		RU77-4096AFFT01*6	–	–	1024	22 bits

*1. Models for serial converter units.
*2. When using the encoder pulse output with these external encoders, the setting range of Pn281 is restricted. For details, refer to *8.3.3 Setting Encoder Output Pulses (PAO, PBO, and PCO)*.
*3. Model for sensor head with interpolator.
*4. Model for interface unit by Heidenhain.
*5. For details on this external encoder, contact Mitutoyo.
*6. Model for rotational external encoder.

Refer to the manuals for the external encoder and serial converter unit for details on the sine wave pitch and the number of divisions of the external encoder.

■ Setting Example

If the servomotor moves 0.2 μm for every pulse of position reference, the external encoder sine wave pitch is 20 μm, and the number of divisions is 256, the electronic gear ratio will be as follow.

$$\text{Electronic gear ratio } \frac{B}{A} = \frac{Pn20E}{Pn210} = \frac{0.2 \times 256}{20} = \frac{512}{200}$$

Therefore, set 512 for Pn20E (numerator B) and 200 for Pn210 (denominator A).

8.3.6 Alarm Detection

The setting of alarm detection (Pn51B/Pn52A) is shown below.

(1) Excessive Error Level between Servomotor and Load Positions (Pn51B)

This setting detects the difference between the feedback position of the motor encoder and the feedback load position of the external encoder in fully-closed loop control. If the detected difference is above the set level, the motor-load position error overflow alarm (A.d10) will be output.

Pn51B	Excessive Error Level between Servomotor and Load Positions		Position		Classification
	Setting Range	Setting Unit	Factory Setting	When Enabled	
	0 to 1073741824	1 reference unit	1000	Immediately	Setup

Note: When Pn51B is set to 0, the motor-load position error overflow alarm (A.d10) is not detected.

(2) Multiplier per One Fully-closed Rotation (Pn52A)

The coefficient of the error between the external encoder and the motor per motor rotation can be set. This function can be used to prevent the motor from running out of control due to damage to the external encoder or to detect slippage of the belt.

■ Setting Example

Increase the value if the belt slips or is twisted excessively.

If the set value is 0, the external encoder value will be read as it is.
If the factory setting of 20 is used, the second rotation will start with the error for the first motor rotation multiplied by 0.8. (Refer to the following figure.)

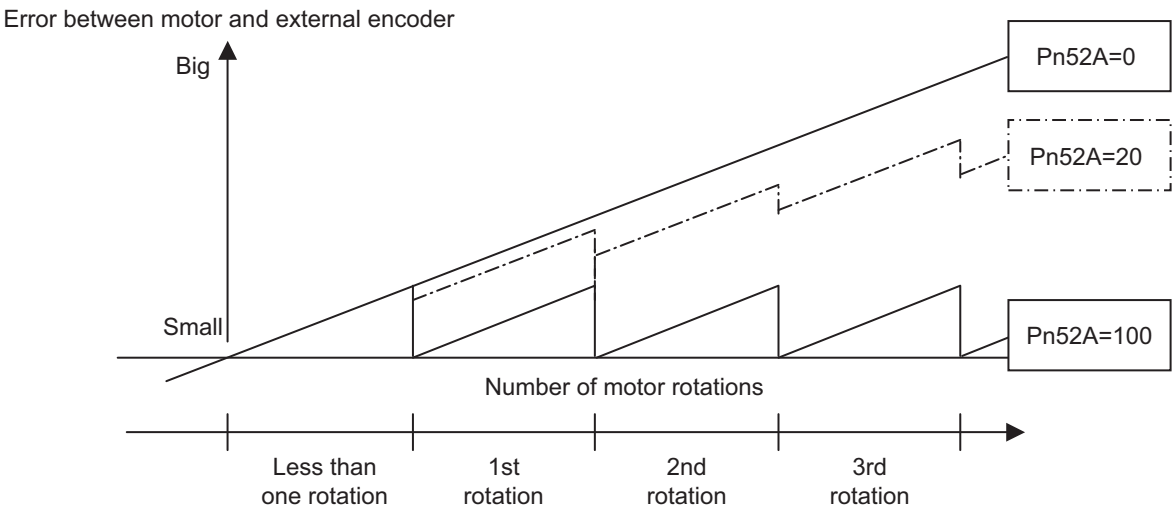

■ Related Parameter

Pn52A	Multiplier per One Fully-closed Rotation		Position		Classification
	Setting Range	Setting Unit	Factory Setting	When Enabled	
	0 to 100	1%	20	Immediately	Setup

8.3.7 Analog Monitor Signal

The position error between servomotor and load can be monitored with the analog monitor.

Parameter		Name	Meaning	When Enabled	Classification
Pn006	n.□□07	Analog Monitor 1 Signal Selection	Position error between servomotor and load [0.01 V/1 reference unit] Factory setting: n.□□02	Immediately	Setup
Pn007	n.□□07	Analog Monitor 2 Signal Selection	Position error between servomotor and load [0.01 V/1 reference unit] Factory setting: n.□□00		

8.3.8 Speed Feedback Method during Fully-closed Loop Control

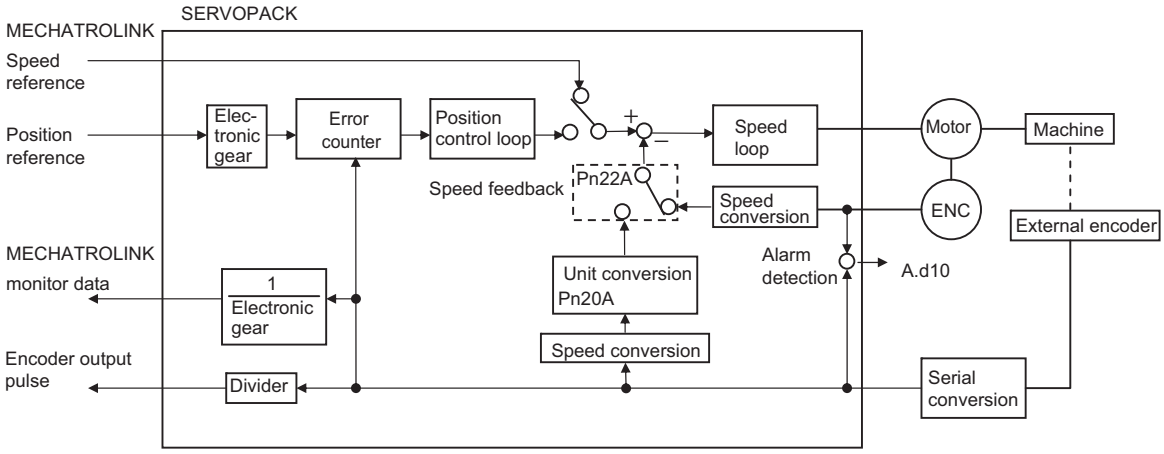

Use Pn22A.3 to select the speed feedback method during fully-closed loop control: Normally, set Pn22A.3 to 0 (Uses motor encoder speed.). Set Pn22A.3 to 1 (Uses external encoder speed.) when connecting a direct drive motor and high-resolution external encoder.

Parameter		Meaning	When Enabled	Classification
Pn22A	n.0□□□ [Factory setting]	Uses motor encoder speed.	After restart	Setup
	n.1□□□	Uses external encoder speed.		

Note: This parameter cannot be used when Pn002.3 is set to 0.

9

Troubleshooting

9.1 Alarm Displays 9-2
9.1.1 List of Alarms 9-2
9.1.2 Troubleshooting of Alarms 9-7
9.2 Warning Displays 9-23
9.2.1 List of Warnings 9-23
9.2.2 Troubleshooting of Warnings 9-25
9.3 Monitoring Communication Data on Occurrence of an Alarm or Warning 9-30
9.4 Troubleshooting Malfunction Based on Operation and Conditions of the Servomotor 9-31

9.1 Alarm Displays

The following sections describe troubleshooting in response to alarm displays.

The alarm name, alarm meaning, alarm stopping method, and alarm reset capability are listed in order of the alarm numbers in *9.1.1 List of Alarms*.

The causes of alarms and troubleshooting methods are provided in *9.1.2 Troubleshooting of Alarms*.

9.1.1 List of Alarms

This section provides list of alarms.

■ Servomotor Stopping Method

If an alarm occurs, the servomotor can be stopped by doing either of the following operations.

Gr.1: The servomotor is stopped according to the setting in Pn001.0 if an alarm occurs. Pn001.0 is factory-set to stop the servomotor by applying the DB.

Gr.2: The servomotor is stopped according to the setting in Pn00B.1 if an alarm occurs. Pn00B.1 is factory-set to stop the servomotor by setting the speed reference to "0." The servomotor under torque control will always use the Gr.1 method to stop. By setting Pn00B.1 to 1, the servomotor stops using the same method as Gr.1. When coordinating a number of servomotors, use this stopping method to prevent machine damage that may result due to differences in the stop method.

■ Alarm Reset

Available:Removing the cause of alarm and then executing the alarm reset can clear the alarm.
N/A:Executing the alarm reset cannot clear the alarm.

Alarm Number	Alarm Name	Meaning	Servo-motor Stopping Method	Alarm Reset
A.020	Parameter Checksum Error 1	The data of the parameter in the SERVOPACK is incorrect.	Gr.1	N/A
A.021	Parameter Format Error 1	The data of the parameter in the SERVOPACK is incorrect.	Gr.1	N/A
A.022	System Checksum Error 1	The data of the parameter in the SERVOPACK is incorrect.	Gr.1	N/A
A.030	Main Circuit Detector Error	Detection data for main circuit is incorrect.	Gr.1	Available
A.040	Parameter Setting Error 1	The parameter setting is outside the setting range.	Gr.1	N/A
A.041	Encoder Output Pulse Setting Error	The encoder output pulse (Pn212) is outside the setting range or does not satisfy the setting conditions.	Gr.1	N/A
A.042	Parameter Combination Error	Combination of some parameters exceeds the setting range.	Gr.1	N/A
A.044	Semi-closed/Fully-closed Loop Control Parameter Setting Error	The settings of the option module and Pn00B.3, Pn002.3 do not match.	Gr.1	N/A
A.04A	Parameter Setting Error 2	Bank member/bank data setting is incorrect.	Gr.1	N/A
A.050	Combination Error	The SERVOPACK and the servomotor capacities do not match each other.	Gr.1	Available
A.051	Unsupported Device Alarm	The device unsupported was connected.	Gr.1	N/A
A.0b0	Cancelled Servo ON Command Alarm	The servo ON command (SV_ON) was sent from the host controller after executing a utility function that turns ON servomotor.	Gr.1	Available
A.100	Overcurrent or Heat Sink Overheated	An overcurrent flowed through the IGBT or the heat sink of the SERVOPACK was overheated.	Gr.1	N/A
A.300	Regeneration Error	Regenerative circuit or regenerative resistor is faulty.	Gr.1	Available

(cont'd)

Alarm Number	Alarm Name	Meaning	Servo-motor Stopping Method	Alarm Reset
A.320	Regenerative Overload	Regenerative energy exceeds regenerative resistor capacity.	Gr.2	Available
A.330	Main Circuit Power Supply Wiring Error	• Setting of AC input/DC input is incorrect. • Power supply wiring is incorrect.	Gr.1	Available
A.400	Overvoltage	Main circuit DC voltage is excessively high.	Gr.1	Available
A.410	Undervoltage	Main circuit DC voltage is excessively low.	Gr.2	Available
A.450	Main-Circuit Capacitor Overvoltage	The capacitor of the main circuit has deteriorated or is faulty.	Gr.1	N/A
A.510	Overspeed	The servomotor speed is above the maximum rotational speed.	Gr.1	Available
A.511	Overspeed of Encoder Output Pulse Rate	The pulse output speed upper limit of the set encoder output pulse (Pn212) is exceeded.	Gr.1	Available
A.520	Vibration Alarm	Incorrect vibration at the motor speed was detected.	Gr.1	Available
A.521	Autotuning Alarm	Vibration was detected while performing tuning-less function.	Gr.1	Available
A.710	Overload: High Load	The servomotor was operating for several seconds to several tens of seconds under a torque largely exceeding ratings.	Gr.2	Available
A.720	Overload: Low Load	The servomotor was operating continuously under a torque exceeding ratings.	Gr.1	Available
A.730 **A.731**	Dynamic Brake Overload	When the dynamic brake was applied, rotational energy exceeded the capacity of dynamic brake resistor.	Gr.1	Available
A.740	Overload of Surge Current Limit Resistor	The main circuit power was frequently turned ON and OFF.	Gr.1	Available
A.7A0	Heat Sink Overheated	The heat sink of the SERVOPACK exceeded 100°C.	Gr.2	Available
A.7AB	Built-in Fan in SERVOPACK Stopped	The fan inside the SERVOPACK stopped.	Gr.1	Available
A.810	Encoder Backup Error	The power supplies to the encoder all failed and position data was lost.	Gr.1	N/A
A.820	Encoder Checksum Error	The checksum results of encoder memory is incorrect.	Gr.1	N/A
A.830	Absolute Encoder Battery Error	The battery voltage was lower than the specified value after the control power supply was turned ON.	Gr.1	Available
A.840	Encoder Data Error	Data in the encoder is incorrect.	Gr.1	N/A
A.850	Encoder Overspeed	The encoder was rotating at high speed when the power was turned ON.	Gr.1	N/A
A.860	Encoder Overheated	The internal temperature of encoder is too high.	Gr.1	N/A
A.8A0	External Encoder Error	External encoder is faulty.	Gr.1	Available
A.8A1	External Encoder Error of Module	Serial converter unit is faulty.	Gr.1	Available
A.8A2	External Encoder Error of Sensor	External encoder is faulty.	Gr.1	Available
A.8A3	External Encoder Error of Position	The position data of external encoder is faulty.	Gr.1	Available
A.8A5	External Encoder Overspeed	The overspeed from the external encoder occurred.	Gr.1	Available
A.8A6	External Encoder Overheated	The overheat from the external encoder occurred.	Gr.1	Available
A.b31	Current Detection Error 1	The current detection circuit for phase U is faulty.	Gr.1	N/A
A.b32	Current Detection Error 2	The current detection circuit for phase V is faulty.	Gr.1	N/A

(cont'd)

Alarm Number	Alarm Name	Meaning	Servo-motor Stopping Method	Alarm Reset
A.b33	Current Detection Error 3	The detection circuit for the current is faulty.	Gr.1	N/A
A.b6A	MECHATROLINK Communications ASIC Error 1	ASIC error occurred in the MECHATROLINK communications.	Gr.1	N/A
A.b6b	MECHATROLINK Communications ASIC Error 2	ASIC error occurred in the MECHATROLINK communications.	Gr.2	N/A
A.bF0	System Alarm 0	"Internal program error 0" of the SERVOPACK occurred.	Gr.1	N/A
A.bF1	System Alarm 1	"Internal program error 1" of the SERVOPACK occurred.	Gr.1	N/A
A.bF2	System Alarm 2	"Internal program error 2" of the SERVOPACK occurred.	Gr.1	N/A
A.bF3	System Alarm 3	"Internal program error 3" of the SERVOPACK occurred.	Gr.1	N/A
A.bF4	System Alarm 4	"Internal program error 4" of the SERVOPACK occurred.	Gr.1	N/A
A.C10	Servo Overrun Detected	The servomotor ran out of control.	Gr.1	Available
A.C80	Absolute Encoder Clear Error and Multiturn Limit Setting Error	The multiturn for the absolute encoder was not properly cleared or set.	Gr.1	N/A
A.C90	Encoder Communications Error	Communications between the SERVOPACK and the encoder is not possible.	Gr.1	N/A
A.C91	Encoder Communications Position Data Error	An encoder position data calculation error occurred.	Gr.1	N/A
A.C92	Encoder Communications Timer Error	An error occurs in the communications timer between the encoder and the SERVOPACK.	Gr.1	N/A
A.CA0	Encoder Parameter Error	Encoder parameters are faulty.	Gr.1	N/A
A.Cb0	Encoder Echoback Error	Contents of communications with encoder are incorrect.	Gr.1	N/A
A.CC0	Multiturn Limit Disagreement	Different multiturn limits have been set in the encoder and the SERVOPACK.	Gr.1	N/A
A.CF1	Feedback Option Module Communications Error (Reception error)	Reception from the Feedback Option Module is faulty.	Gr.1	N/A
A.CF2	Feedback Option Module Communications Error (Timer stop)	Timer for communications with the Feedback Option Module is faulty.	Gr.1	N/A
A.d00	Position Error Overflow	Position error exceeded the value of excessive position error alarm level (Pn520) when the servomotor power is ON.	Gr.1	Available
A.d01	Position Error Overflow Alarm at Servo ON	This alarm occurs if the servomotor power is turned ON when the position error is greater than the set value of Pn526 while the servomotor power is OFF.	Gr.1	Available
A.d02	Position Error Overflow Alarm by Speed Limit at Servo ON	When the position errors remain in the error counter, Pn529 limits the speed if the servomotor power is turned ON. If Pn529 limits the speed in such a state, this alarm occurs when position references are input and the number of position errors exceeds the value set for the excessive position error alarm level (Pn520).	Gr.2	Available
A.d10	Motor-load Position Error Overflow	During fully-closed loop control, the position error between motor and load is excessive.	Gr.2	Available

(cont'd)

Alarm Number	Alarm Name	Meaning	Servo-motor Stopping Method	Alarm Reset
A.E02	MECHATROLINK Internal Synchronization Error 1	Synchronization error during MECHATROLINK communications with the SERVOPACK.	Gr.1	Available
A.E40	MECHATROLINK Transmission Cycle Setting Error	The setting of the MECHATROLINK transmission cycle is out of the allowable range.	Gr.2	Available
A.E41	MECHATROLINK Communications Data Size Setting Error	The setting of the MECHATROLINK communications data size is incorrect.	Gr.2	Available
A.E42	MECHATROLINK Station Address Setting Error	The setting of the MECHATROLINK station address is incorrect.	Gr.2	N/A
A.E50	MECHATROLINK Synchronization Error	A synchronization error occurs during MECHATROLINK communications.	Gr.2	Available
A.E51	MECHATROLINK Synchronization Failed	A synchronization failure occurs in MECHATROLINK communications.	Gr.2	Available
A.E60	MECHATROLINK Communications Error (Reception error)	A communications error occurs continuously during MECHATROLINK communications.	Gr.2	Available
A.E61	MECHATROLINK Transmission Cycle Error (Synchronization interval error)	The transmission cycle fluctuates during MECHATROLINK communications.	Gr.2	Available
A.E62	MECHATROLINK Communications Error (FCS error)	Communications error occurs continuously during MECHATROLINK communications.	Gr.2	Available
A.E63	MECHATROLINK Synchronization Frame Not Received Alarm	Synchronization frames are not received continuously during MECHATROLINK communications.	Gr.2	Available
A.E71	Safety Option Module Detection Failure	Detection of the safety option module failed.	Gr.1	N/A
A.E72	Feedback Option Module Detection Failure	Detection of the Feedback Option Module failed.	Gr.1	N/A
A.E74	Unsupported Safety Option Module	An unsupported safety option module was connected.	Gr.1	N/A
A.E75	Unsupported Feedback Option Module	An unsupported feedback option module was connected.	Gr.1	N/A
A.E81[*1]	SERVOPACK: Safety Module Alarm	–	–	–
A.EA2	DRV Alarm 2 (SERVOPACK WDC error)	A SERVOPACK DRV alarm 0 occurs.	Gr.2	Available
A.Eb1	Safety Function Signal Input Timing Error	The safety function signal input timing is faulty.	Gr.1	N/A
A.Eb□ *1	SERVOPACK: Safety Module Alarms	–	–	–
A.EC□ *1	SERVOPACK: Safety Module Alarms	–	–	–
A.Ed1	Command Execution Timeout	A timeout error occurred when using a MECHATROLINK command.	Gr.2	Available
A.F10	Main Circuit Cable Open Phase	With the main power supply ON, voltage was low for more than 1 second in phase R, S, or T.	Gr.2	Available

*1. These alarms occur in SERVOPACKs with safety modules.
For details, refer to *Σ-V Series User's Manual, Safety Module* (No.: SIEP C720829 06).

(cont'd)

Alarm Number	Alarm Name	Meaning	Servo-motor Stopping Method	Alarm Reset
A.F50	Servomotor Main Circuit Cable Disconnection	The servomotor did not operate or power was not supplied to the servomotor even though the SV_ON (Servo ON) command was input when the servomotor was ready to receive it.	Gr.1	Available
FL-1[*2]	System Alarm	Internal program error occurred in the SERVOPACK	–	N/A
FL-2[*2]			–	N/A
CPF00	Digital Operator Transmission Error 1	Digital operator (JUSP-OP05A-1-E) fails to communicate with the SERVOPACK (e.g., CPU error).	–	N/A
CPF01	Digital Operator Transmission Error 2		–	N/A
A.– –	Not an error	Normal operation status	–	–

*2. These alarms are not stored in the alarm history and are displayed only in the panel display.

9.1.2 Troubleshooting of Alarms

If an error occurs in servo drives, an alarm display such as A.□□□ and CPF□□ will appear on the panel display.

Refer to the following table to identify the cause of an alarm and the action to be taken.
Contact your Yaskawa representative if the problem cannot be solved by the described corrective action.

Alarm Number: Alarm Name (Alarm Description)	Cause	Investigative Actions	Corrective Actions
A.020: Parameter Checksum Error 1 (The parameter data in the SERVOPACK is incorrect.)	The power supply voltage suddenly dropped.	Measure the power supply voltage.	Set the power supply voltage within the specified range, and set Fn005 to initialize the parameter.
	The power supply went OFF while changing a parameter setting.	Check the circumstances when the power supply went OFF.	Set Fn005 to initialize the parameter and then set the parameter again.
	The number of times that parameters were written exceeded the limit.	Check to see if the parameters were frequently changed through the host controller.	The SERVOPACK may be faulty. Replace the SERVOPACK. Reconsider the method of writing parameters.
	Malfunction caused by noise from the AC power supply or grounding line, static electricity noise, etc.	Turn the power supply ON and OFF several times. If the alarm still occurs, there may be noise interference.	Take countermeasures against noise.
	Gas, water drops, or cutting oil entered the SERVOPACK and caused failure of the internal components.	Check the installation conditions.	The SERVOPACK may be faulty. Replace the SERVOPACK.
	A SERVOPACK fault occurred.	Turn the power supply ON and OFF several times. If the alarm still occurs, the SERVOPACK may be faulty.	The SERVOPACK may be faulty. Replace the SERVOPACK.
A.021: Parameter Format Error 1 (The parameter data in the SERVOPACK is incorrect.)	The software version of SERVOPACK that caused the alarm is older than that of the written parameter.	Check Fn012 to see if the set software version agrees with that of the SERVOPACK. If not, an alarm may occur.	Write the parameter of another SERVOPACK of the same model with the same software version. Then turn the power OFF and then ON again.
	A SERVOPACK fault occurred.	–	The SERVOPACK may be faulty. Replace the SERVOPACK.
A.022: System Checksum Error 1 (The parameter data in the SERVOPACK is incorrect.)	The power supply voltage suddenly dropped.	Measure the power supply voltage.	The SERVOPACK may be faulty. Replace the SERVOPACK.
	The power supply went OFF while setting an utility function.	Check the circumstances when the power supply went OFF.	The SERVOPACK may be faulty. Replace the SERVOPACK.
	A SERVOPACK fault occurred.	Turn the power supply ON and OFF several times. If the alarm still occurs, the SERVOPACK may be faulty.	The SERVOPACK may be faulty. Replace the SERVOPACK.
A.030: Main Circuit Detector Error	A SERVOPACK fault occurred.	–	The SERVOPACK may be faulty. Replace the SERVOPACK.
A.040: Parameter Setting Error 1 (The parameter setting was out of the setting range.)	The SERVOPACK and servomotor capacities do not match each other.	Check the combination of SERVOPACK and servomotor capacities.	Select the proper combination of SERVOPACK and servomotor capacities.
	A SERVOPACK fault occurred.	–	The SERVOPACK may be faulty. Replace the SERVOPACK.
	The parameter setting is out of the setting range.	Check the setting ranges of the parameters that have been changed.	Set the parameter to a value within the setting range.
	The electronic gear ratio is out of the setting range.	Check the electronic gear ratio. The ratio must satisfy: 0.001< (Pn20E/Pn210) < 4000.	Set the electronic gear ratio in the range: 0.001< (Pn20E/Pn210) < 4000.

(cont'd)

Alarm Number: Alarm Name (Alarm Description)	Cause	Investigative Actions	Corrective Actions
A.041: Encoder Output Pulse Setting Error	The encoder output pulse (Pn212) is out of the setting range and does not satisfy the setting conditions.	Check the parameter Pn212.	Set Pn212 to a correct value.
A.042:*1 Parameter Combination Error	The speed of program JOG operation (Fn004) is lower than the setting range after having changed the electronic gear ratio (Pn20E/Pn210) or the servomotor.	Check if the detection conditions*1 are satisfied.	Decrease the setting of the electronic gear ratio (Pn20E/Pn210).
	The speed of program JOG operation (Fn004) is lower than the setting range after having changed the setting of the program JOG movement speed (Pn533).	Check if the detection conditions*1 are satisfied.	Increase the setting of the program JOG movement speed (Pn533).
	The moving speed of advanced autotuning is lower than the setting range after having changed the electronic gear ratio (Pn20E/Pn210) or the servomotor.	Check if the detection conditions*1 are satisfied.	Decrease the setting of the electronic gear ratio (Pn20E/Pn210).
A.044: Semi-closed/Fully-closed Loop Control Parameter Setting Error	The setting of the fully-closed module does not match with that of Pn002.3.	Check the settings of Pn002.3.	The setting of fully-closed module must be compatible with the setting of Pn002.3.
A.04A: Parameter Setting Error 2	For a 4-byte parameter bank, no registration in two consecutive bytes for two bank members.	–	Change the number of bytes for bank members to an appropriate value.
	The total amount of bank data exceeds 64. (Pn900 × Pn901 > 64)	–	Reduce the total amount of bank data to 64 or less.
A.050: Combination Error (The SERVOPACK and servomotor capacities do not correspond.)	The SERVOPACK and servomotor capacities do not match each other.	Check the capacities to see if they satisfy the following condition: $\frac{1}{4} \leq \frac{\text{Servomotor capacity}}{\text{SERVOPACK capacity}} \leq 4$	Select the proper combination of SERVOPACK and servomotor capacities.
	An encoder fault occurred.	Replace the servomotor and see if the alarm occurs again.	Replace the servomotor (encoder).
	A SERVOPACK fault occurred.	–	The SERVOPACK may be faulty. Replace the SERVOPACK.
A.051: Unsupported Device Alarm	An unsupported serial converter unit, encoder, or external encoder is connected to the SERVOPACK.	Check the product specifications, and select the correct model.	Select the correct combination of units.
A.0b0: Cancelled Servo ON Command Alarm	After executing the utility function to turn ON the power to the motor, the servo ON command (SV_ON) was sent from the host controller.	–	Turn the SERVOPACK power supply OFF and then ON again or execute a software reset.

*1. Detection conditions
If one of the following conditions detected, an alarm occurs.

- $\text{Pn533 [min}^{-1}] \times \frac{\text{Encoder resolution}}{6 \times 10^5} \leq \frac{\text{Pn20E}}{\text{Pn210}}$
- $\text{Max Motor Speed [min}^{-1}] \times \frac{\text{Encoder resolution}}{\text{About } 3.66 \times 10^{12}} \geq \frac{\text{Pn20E}}{\text{Pn210}}$

(cont'd)

Alarm Number: Alarm Name (Alarm Description)	Cause	Investigative Actions	Corrective Actions
A.100: Overcurrent or Heat Sink Overheated (An overcurrent flowed through the IGBT or heat sink of SERVOPACK overheated.)	Incorrect wiring or contact fault of main circuit cables.	Check the wiring. Refer to *3.1 Main Circuit Wiring*.	Correct the wiring.
	Short-circuit or ground fault of main circuit cables.	Check for short-circuits across the servomotor terminal phases U, V, and W, or between the grounding and servomotor terminal phases U, V, or W. Refer to *3.1 Main Circuit Wiring*.	The cable may be short-circuited. Replace the cable.
	Short-circuit or ground fault inside the servomotor.	Check for short-circuits across the servomotor terminal phases U, V, and W, or between the grounding and servomotor terminal phases U, V, or W. Refer to *3.1 Main Circuit Wiring*.	The servomotor may be faulty. Replace the servomotor.
	Short-circuit or ground fault inside the SERVOPACK.	Check for short-circuits across the servomotor connection terminals U, V, and W on the SERVOPACK, or between the grounding and terminal U, V, or W. Refer to *3.1 Main Circuit Wiring*.	The SERVOPACK may be faulty. Replace the SERVOPACK.
	Incorrect wiring or contact fault of the regenerative resistor.	Check the wiring. Refer to *3.7 Connecting Regenerative Resistors*.	Correct the wiring.
	The dynamic brake (DB: Emergency stop executed from the SERVOPACK) was frequently activated, or the DB overload alarm occurred.	Check the power consumed by DB resistance (Un00B) to see how many times the DB has been used. Or, check the alarm history display Fn000 to see if the DB overload alarm A.730 or A.731 was reported.	Change the SERVOPACK model, operating conditions, or the mechanism so that the DB does not need to be used so frequently.
	The generated regenerative resistor value exceeded the SERVOPACK regenerative energy processing capacity.	Check the regenerative load ratio (Un00A) to see how many times the regenerative resistor has been used.	Check the operating condition including overload, and reconsider the regenerative resistor value.
	The SERVOPACK regenerative resistance is too small.	Check the regenerative load ratio (Un00A) to see how many times the regenerative resistor has been used.	Change the regenerative resistance value to a value larger than the SERVOPACK minimum allowable resistance value.
	A heavy load was applied while the servomotor was stopped or running at a low speed.	Check to see if the operating conditions are outside servo drive specifications.	Reduce the load applied to the servomotor or increase the operating speed.
	Malfunction caused by noise interference.	Improve the wiring or installation environment, such as by reducing noise, and check to see if the alarm recurs.	Take countermeasures for noise, such as correct wiring of the FG. Use an FG wire size equivalent to the SERVOPACK main circuit wire size.
	A SERVOPACK fault occurred.	–	Turn the power supply OFF and then ON again. If the alarm still occurs, the SERVOPACK may be faulty. Replace the SERVOPACK.

(cont'd)

Alarm Number: Alarm Name (Alarm Description)	Cause	Investigative Actions	Corrective Actions
A.300: Regeneration Error	• Regenerative resistor capacity (Pn600) is set to a value other than 0 for a SGDV-R70, -R90, -1R6, -2R1, or -2R8 SERVOPACK, and an external regenerative resistor is not connected. • An external regenerative resistor is not connected to the SGDV-470, SGDV-550, SGDV-590, SGDV-780, SGDV-210, SGDV-260, SGDV-280, or SGDV-370 SERVOPACK.	Check the external regenerative resistor connection and the value of the Pn600.	Connect the external regenerative resistor, or set Pn600 to 0 if no regenerative resistor is required.
	The jumper between the power supply terminals B2 and B3 is removed for the SERVOPACKs other than the SERVOPACKs shown above.	Confirm that a jumper is mounted between the power supply terminals B2 and B3.	Correctly mount a jumper.
	The external regenerative resistor is incorrectly wired, or is removed or disconnected.	Check the external regenerative resistor connection.	Correctly connect the external regenerative resistor.
	A SERVOPACK fault occurred.	–	While the main circuit power supply is OFF, turn the control power supply OFF and then ON again. If the alarm still occurs, the SERVOPACK may be faulty. Replace the SERVOPACK.
A.320: Regenerative Overload	The power supply voltage exceeds the specified limit.	Measure the power supply voltage.	Set the power supply voltage within the specified range.
	Insufficient external regenerative resistance, regenerative resistor capacity, or SERVOPACK capacity. Or, regenerative power has been continuously flowing back.	Check the operating condition or the capacity using the capacity selection Software SigmaJunmaSize+, etc.	Change the regenerative resistance, regenerative resistor capacity, or SERVOPACK capacity. Reconsider the operating conditions using the capacity selection software SigmaJunmaSize+, etc.
	Regenerative power continuously flowed back because negative load was continuously applied.	Check the load applied to the servomotor during operation.	Reconsider the system including servo, machine, and operating conditions.
	The setting of parameter Pn600 is smaller than the external regenerative resistor's capacity.	Check the external regenerative resistor connection and the value of the Pn600.	Set the Pn600 to a correct value.
	The external regenerative resistance is too high.	Check the regenerative resistance.	Change the regenerative resistance to a correct value or use an external regenerative resistor of appropriate capacity.
	A SERVOPACK fault occurred.	–	The SERVOPACK may be faulty. Replace the SERVOPACK.

(cont'd)

Alarm Number: Alarm Name (Alarm Description)	Cause	Investigative Actions	Corrective Actions
A.330: Main Circuit Power Supply Wiring Error (Detected when the power to the main circuit is turned ON.)	The regenerative resistor disconnected when the SERVOPACK power supply voltage was high.	Measure the resistance of the regenerative resistor using a measuring instrument.	When using a regenerative resistor built in the SERVOPACK: Replace the SERVOPACK. When using an external regenerative resistor: Replace the external regenerative resistor.
	In the AC power input mode, DC power was supplied.	Check the power supply to see if it is a DC power supply.	Correct the settings to match the actual power supply specifications.
	In the DC power input mode, AC power was supplied.	Check the power supply to see if it is an AC power supply.	Correct the settings to match the actual power supply specifications.
	Regenerative resistor capacity (Pn600) is set to a value other than 0 for a SGDV-R70, -R90, -1R6, -2R1, or -2R8 SERVOPACK, and an external regenerative resistor is not connected.	Check the external regenerative resistor connection and the value of the Pn600.	Connect the external regenerative resistor, or set Pn600 to 0 if no regenerative resistor is required.
	The jumper between the power supply terminals B2 and B3 is removed for the SERVOPACKs other than the SERVOPACKs shown above.	Confirm that a jumper is mounted between the power supply terminals B2 and B3.	Correctly mount a jumper.
	A SERVOPACK fault occurred.	–	The SERVOPACK may be faulty. Replace the SERVOPACK.
A.400: Overvoltage (Detected in the SERVOPACK main circuit power supply section.)	• For 100-VAC SERVOPACKs: The AC power supply voltage exceeded 145 V. • For 200-VAC SERVOPACKs: The AC power supply voltage exceeded 290 V. • For 400-VAC SERVOPACKs: The AC power supply voltage exceeded 580 V. • For 200-VAC SERVOPACKs: with DC power supply input: The DC power supply voltage exceeded 410 V. • For 400-VAC SERVOPACKs: The DC power supply voltage exceeded 820 V.	Measure the power supply voltage.	Set AC/DC power supply voltage within the specified range.
	The power supply is unstable, or was influenced by a lightning surge.	Measure the power supply voltage.	Improve the power supply conditions by installing a surge absorber, etc. Then, turn the power supply OFF and ON again. If the alarm still occurs, the SERVOPACK may be faulty. Replace the SERVOPACK.
	Voltage for AC power supply was too high during acceleration or deceleration.	Check the power supply voltage and the speed and torque during operation.	Set AC power supply voltage within the specified range.
	The external regenerative resistance is too high for the actual operating conditions.	Check the operating conditions and the regenerative resistance.	Select a regenerative resistance value appropriate for the operating conditions and load.
	The moment of inertia ratio exceeded the allowable value.	Confirm that the moment of inertia ratio is within the allowable range.	Increase the deceleration time, or reduce the load.
	A SERVOPACK fault occurred.	–	Turn the control power OFF and then ON again while the main circuit power supply is OFF. If the alarm still occurs, the SERVOPACK may be faulty. Replace the SERVOPACK.

(cont'd)

Alarm Number: Alarm Name (Alarm Description)	Cause	Investigative Actions	Corrective Actions
A.410: Undervoltage (Detected in the SERVOPACK main circuit power supply section.)	• For 100-VAC SERVOPACKs: The AC power supply voltage is 49 V or less. • For 200-VAC SERVOPACKs: The AC power supply voltage is 120 V or less. • For 400-VAC SERVOPACKs: The AC power supply voltage is 240 V or less.	Measure the power supply voltage.	Set the power supply voltage within the specified range.
	The power supply voltage dropped during operation.	Measure the power supply voltage.	Increase the power supply capacity.
	Occurrence of instantaneous power interruption.	Measure the power supply voltage.	When the instantaneous power cut hold time (Pn509) is set, decrease the setting.
	The SERVOPACK fuse is blown out.	–	Replace the SERVOPACK, connect a reactor, and run the SERVOPACK.
	A SERVOPACK fault occurred.	–	The SERVOPACK may be faulty. Replace the SERVOPACK.
A.450: Main-Circuit Capacitor Overvoltage	A SERVOPACK fault occurred.	–	Replace the SERVOPACK.
A.510: Overspeed (The servomotor speed exceeds the maximum.)	The order of phases U, V, and W in the servomotor wiring is incorrect.	Check the motor wiring.	Confirm that the servomotor is correctly wired.
	A reference value exceeding the overspeed detection level was input.	Check the input value.	Reduce the reference value or adjust the gain.
	The motor speed exceeded the maximum.	Check the motor speed waveform.	Reduce the speed reference input gain, adjust the servo gain, or reconsider the operating conditions.
	A SERVOPACK fault occurred.	–	The SERVOPACK may be faulty. Replace the SERVOPACK.
A.511: Overspeed of Encoder Output Pulse Rate	The encoder output pulse frequency exceeded the limit.	Check the encoder output pulse setting.	Decrease the setting of the encoder output pulse (Pn212).
	The encoder output pulse output frequency exceeded the limit because the motor speed was too high.	Check the encoder output pulse output setting and motor speed.	Decrease the motor speed.
A.520: Vibration Alarm	Abnormal vibration was detected at the motor speed.	Check for abnormal noise from the servomotor, and check the speed and torque waveforms during operation.	Reduce the motor speed or reduce the speed loop gain (Pn100).
	The moment of inertia ratio (Pn103) value is greater than the actual value or is greatly changed.	Check the moment of inertia ratio.	Set the moment of inertia ratio (Pn103) to an appropriate value.
A.521: Autotuning Alarm (Vibration was detected while executing the one-parameter tuning, Easy-FFT, or tuning-less function.)	The servomotor vibrated considerably while performing tuning-less function.	Check the motor speed waveform.	Reduce the load so that the moment of inertia ratio falls within the allowable value, or raise the load level using the tuning-less levels setting (Fn200) or reduce the rigidity level.
	The servomotor vibrated considerably during one-parameter tuning or EasyFFT.	Check the motor speed waveform.	Check the operation procedure of corresponding function and take a corrective action.

(cont'd)

Alarm Number: Alarm Name (Alarm Description)	Cause	Investigative Actions	Corrective Actions
A.710: A.720: Overload A.710: High Load A.720: Low Load	Incorrect wiring or contact fault of servomotor and encoder.	Check the wiring.	Confirm that the servomotor and encoder are correctly wired.
	Operation beyond the overload protection characteristics.	Check the servomotor overload characteristics and executed run command.	Reconsider the load conditions and operating conditions. Or, increase the motor capacity.
	Excessive load was applied during operation because the servomotor was not driven due to mechanical problems.	Check the executed operation reference and motor speed.	Remove the mechanical problems.
	A SERVOPACK fault occurred.	–	The SERVOPACK may be faulty. Replace the SERVOPACK.
A.730: A.731: Dynamic Brake Overload (An excessive power consumption of dynamic brake was detected.)	The servomotor rotates because of external force.	Check the operation status.	Take measures to ensure the servomotor will not rotate because of external force.
	The rotating energy at a DB stop exceeds the DB resistance capacity.	Check the power consumed by DB resistance (Un00B) to see how many times the DB has been used.	Reconsider the following: • Reduce the motor reference speed. • Reduce the moment of inertia ratio. • Reduce the number of times of the DB stop operation.
	A SERVOPACK fault occurred.	–	The SERVOPACK may be faulty. Replace the SERVOPACK.
A.740: Overload of Surge Current Limit Resistor (The main circuit power is turned ON/OFF too frequently.)	The inrush current limit resistor operation frequency at the main circuit power supply ON/OFF operation exceeds the allowable range.	–	Reduce the frequency of turning the main circuit power supply ON/OFF.
	A SERVOPACK fault occurred.	–	The SERVOPACK may be faulty. Replace the SERVOPACK.
A.7A0: Heat Sink Overheated (Detected when the heat sink temperature exceeds 100°C.)	The surrounding air temperature is too high.	Check the surrounding air temperature using a thermostat.	Decrease the surrounding air temperature by improving the SERVOPACK installation conditions.
	The overload alarm has been reset by turning OFF the power too many times.	Check the alarm history display (Fn000) to see if the overload alarm was reported.	Change the method for resetting the alarm.
	Excessive load or operation beyond the regenerative energy processing capacity.	Check the accumulated load ratio (Un009) to see the load during operation, and the regenerative load ratio (Un00A) to see the regenerative energy processing capacity.	Reconsider the load and operating conditions.
	Incorrect SERVOPACK installation orientation or/and insufficient space around the SERVOPACK.	Check the SERVOPACK installation conditions.	Install the SERVOPACK correctly as specified.
	A SERVOPACK fault occurred.	–	The SERVOPACK may be faulty. Replace the SERVOPACK.
A.7AB: Built-in Fan in SERVOPACK Stopped	The fan inside the SERVOPACK stopped.	Check for foreign matter or debris inside the SERVOPACK.	Remove foreign matter or debris from the SERVOPACK. If the alarm still occurs, the SERVOPACK may be faulty. Replace the SERVOPACK.

(cont'd)

Alarm Number: Alarm Name (Alarm Description)	Cause	Investigative Actions	Corrective Actions
A.810: Encoder Backup Error (Only when an absolute encoder is connected.) (Detected on the encoder side.)	Alarm occurred when the power to the absolute encoder was initially turned ON.	Check to see if the power was turned ON initially.	Set up the encoder (Fn008).
	The encoder cable disconnected, and connected again.	Check to see if the power was turned ON initially.	Confirm the connection and set up the encoder (Fn008).
	The power from both the control power supply (+5 V) from the SERVOPACK and the battery power supply is not being supplied.	Check the encoder connector battery or the connector contact status.	Replace the battery or take similar measures to supply power to the encoder, and set up the encoder (Fn008).
	An absolute encoder fault occurred.	–	If the alarm cannot be reset by setting up the encoder again, replace the servomotor.
	A SERVOPACK fault occurred.	–	The SERVOPACK may be faulty. Replace the SERVOPACK.
A.820: Encoder Checksum Error (Detected on the encoder side.)	An encoder fault occurred.	–	• Absolute encoder Set up the encoder again using Fn008. If the alarm still occurs, the servomotor may be faulty. Replace the servomotor. • Absolute encoder that shows values for a single rotation or incremental encoder The servomotor may be faulty. Replace the servomotor.
	A SERVOPACK fault occurred.	–	The SERVOPACK may be faulty. Replace the SERVOPACK.
A.830: Absolute Encoder Battery Error (The absolute encoder battery voltage is lower than the specified value.)	The battery connection is incorrect.	Check the battery connection.	Reconnect the battery.
	The battery voltage is lower than the specified value 2.7 V.	Measure the battery voltage.	Replace the battery.
	A SERVOPACK fault occurred.	–	The SERVOPACK may be faulty. Replace the SERVOPACK.
A.840: Encoder Data Error (Detected on the encoder side.)	An encoder malfunctioned.	–	Turn the power supply OFF and then ON again. If the alarm still occurs, the servomotor may be faulty. Replace the servomotor.
	Malfunction of encoder because of noise interference, etc.	–	Correct the wiring around the encoder by separating the encoder cable from the servomotor main circuit cable or by checking the grounding and other wiring.
A.850: Encoder Overspeed (Detected when the control power supply was turned ON.) (Detected on the encoder side.)	The servomotor speed is higher than 200 min^{-1} when the control power supply was turned ON.	Check the motor rotating speed (Un000) to confirm the servomotor speed when the power is turned ON.	Reduce the servomotor speed to a value less than 200 min^{-1}, and turn ON the control power supply.
	An encoder fault occurred.	–	Turn the power supply OFF and then ON again. If the alarm still occurs, the servomotor may be faulty. Replace the servomotor.
	A SERVOPACK fault occurred.	–	Turn the power supply OFF and then ON again. If the alarm still occurs, the SERVOPACK may be faulty. Replace the SERVOPACK.

(cont'd)

Alarm Number: Alarm Name (Alarm Description)	Cause	Investigative Actions	Corrective Actions
A.860: Encoder Overheated (Only when an absolute encoder is connected.) (Detected on the encoder side.)	The ambient operating temperature around the servomotor is too high.	Measure the ambient operating temperature around the servomotor.	Reduce the ambient operating temperature of the servomotor to 40°C or less.
	The motor load is greater than the rated load.	Check the accumulated load ratio (Un009) to see the load.	Operate the SERVOPACK so that the motor load remains within the specified range.
	An encoder fault occurred.	–	Turn the power supply OFF and then ON again. If the alarm still occurs, the servomotor may be faulty. Replace the servomotor.
	A SERVOPACK fault occurred.	–	Turn the power supply OFF and then ON again. If the alarm still occurs, the SERVOPACK may be faulty. Replace the SERVOPACK.
A.8A0: External Encoder Error	Setting the zero point position of external absolute encoder failed because the servomotor rotated.	Before setting the zero point position, use the fully-closed feedback pulse counter (Un00E) to confirm that the servomotor is not rotating.	The servomotor must be stopped while setting the zero point position.
	An external encoder fault occurred.	–	Replace the external encoder.
A.8A1: External Encoder Error of Module	An external encoder fault occurred.	–	Replace the external encoder.
	A serial converter unit fault occurred.	–	Replace the serial converter unit.
A.8A2: External Encoder Error of Sensor (Incremental)	An external encoder fault occurred.	–	Replace the external encoder.
A.8A3: External Encoder Error of Position (Absolute)	An external absolute encoder fault occurred.	–	The external absolute encoder may be faulty. Refer to the encoder manufacturer's instruction manual for corrective actions.
A.8A5: External Encoder Overspeed	The overspeed from the external encoder occurred.	Check the maximum speed of the external encoder.	Keep the external encoder below its maximum speed.
A.8A6: External Encoder Overheated	The overheat from the external encoder occurred.	–	Replace the external encoder.
A.b31: Current Detection Error 1	The current detection circuit for phase U is faulty.	–	Turn the power supply OFF and then ON again. If the alarm still occurs, the SERVOPACK may be faulty. Replace the SERVOPACK.
A.b32: Current Detection Error 2	The current detection circuit for phase V is faulty.	–	Turn the power supply OFF and then ON again. If the alarm still occurs, the SERVOPACK may be faulty. Replace the SERVOPACK.
A.b33: Current Detection Error 3	The detection circuit for the current is faulty.	–	Turn the power supply OFF and then ON again. If the alarm still occurs, the SERVOPACK may be faulty. Replace the SERVOPACK.
	The servomotor main circuit cable is disconnected.	Check for disconnection of the servomotor main circuit cable.	Correct the servomotor wiring.
A.b6A: MECHATROLINK Communications ASIC Error 1	SERVOPACK MECHATROLINK communication section fault.	–	Turn the power supply OFF and then ON again. If the alarm still occurs, the SERVOPACK may be faulty. Replace the SERVOPACK.

(cont'd)

Alarm Number: Alarm Name (Alarm Description)	Cause	Investigative Actions	Corrective Actions
A.b6b: MECHATROLINK Communications ASIC Error 2	MECHATROLINK data reception error occurred due to noise interference.	–	Take measures against noise. Check the MECHATROLINK communications cable and FG wiring and take measures such as adding ferrite core on the MECHATROLINK communications cable.
	SERVOPACK MECHATROLINK communication section fault.	–	Turn the power supply OFF and then ON again. If the alarm still occurs, the SERVOPACK may be faulty. Replace the SERVOPACK.
A.bF0: System Alarm 0	A SERVOPACK fault occurred.	–	Turn the power supply OFF and then ON again. If the alarm still occurs, the SERVOPACK may be faulty. Replace the SERVOPACK.
A.bF1: System Alarm 1	A SERVOPACK fault occurred.	–	Turn the power supply OFF and then ON again. If the alarm still occurs, the SERVOPACK may be faulty. Replace the SERVOPACK.
A.bF2: System Alarm 2	A SERVOPACK fault occurred.	–	Turn the power supply OFF and then ON again. If the alarm still occurs, the SERVOPACK may be faulty. Replace the SERVOPACK.
A.bF3: System Alarm 3	A SERVOPACK fault occurred.	–	Turn the power supply OFF and then ON again. If the alarm still occurs, the SERVOPACK may be faulty. Replace the SERVOPACK.
A.bF4: System Alarm 4	A SERVOPACK fault occurred.	–	Turn the power supply OFF and then ON again. If the alarm still occurs, the SERVOPACK may be faulty. Replace the SERVOPACK.
A.C10: Servo Overrun Detected (Detected when the servomotor power is ON.)	The order of phases U, V, and W in the servomotor wiring is incorrect.	Check the motor wiring.	Confirm that the servomotor is correctly wired.
	An encoder fault occurred.	–	If the alarm still occurs after turning the power OFF and then ON again, even though the servomotor is correctly wired, the servomotor may be faulty. Replace the servomotor.
	A SERVOPACK fault occurred.	–	Turn the power supply OFF and then ON again. If the alarm still occurs, the SERVOPACK may be faulty. Replace the SERVOPACK.
A.C80: Absolute Encoder Clear Error and Multiturn Limit Setting Error	An encoder fault occurred.	–	Turn the power supply OFF and then ON again. If the alarm still occurs, the servomotor may be faulty. Replace the servomotor.
	A SERVOPACK fault occurred.	–	Turn the power supply OFF and then ON again. If the alarm still occurs, the SERVOPACK may be faulty. Replace the SERVOPACK.

(cont'd)

Alarm Number: Alarm Name (Alarm Description)	Cause	Investigative Actions	Corrective Actions
A.C90: Encoder Communications Error	Contact fault of connector or incorrect wiring for encoder cable.	Check the connector contact status for encoder cable.	Re-insert the connector and confirm that the encoder is correctly wired.
	Cable disconnection for encoder cable or short-circuit. Or, incorrect cable impedance.	Check the encoder cable.	Use the cable with the specified rating.
	Corrosion caused by improper temperature, humidity, or gas, short-circuit caused by intrusion of water drops or cutting oil, or connector contact fault caused by vibration.	Check the operating environment.	Improve the operating environmental conditions, and replace the cable. If the alarm still occurs, replace the SERVOPACK.
	Malfunction caused by noise interference.	–	Correct the wiring around the encoder by separating the encoder cable from the servomotor main circuit cable or by checking the grounding and other wiring.
	A SERVOPACK fault occurred.	–	Connect the servomotor to another SERVOPACK, and turn ON the control power. If no alarm occurs, the SERVOPACK may be faulty. Replace the SERVOPACK.
A.C91: Encoder Communications Position Data Error	Noise interference occurred on the I/O signal line because the encoder cable is bent and the sheath is damaged.	Check the encoder cable and connector.	Confirm that there is no problem with the cable layout.
	The encoder cable is bundled with a high-current line or near a high-current line.	Check the cable layout for encoder cable.	Confirm that there is no surge voltage on the cable.
	The FG potential varies because of influence from machines on the servomotor side, such as the welder.	Check the cable layout for encoder cable.	Properly ground the machines to separate from the encoder FG.
A.C92: Encoder Communications Timer Error	Noise interference occurred on the I/O signal line from the encoder.	–	Take countermeasures against noise for the encoder wiring.
	Excessive vibration and shocks were applied to the encoder.	Check the operating environment.	Reduce the machine vibration or correctly install the servomotor.
	An encoder fault occurred.	–	Turn the power supply OFF and then ON again. If the alarm still occurs, the servomotor may be faulty. Replace the servomotor.
	A SERVOPACK fault occurred.	–	Turn the power supply OFF and then ON again. If the alarm still occurs, the SERVOPACK may be faulty. Replace the SERVOPACK.
A.CA0: Encoder Parameter Error	An encoder fault occurred.	–	Turn the power supply OFF and then ON again. If the alarm still occurs, the servomotor may be faulty. Replace the servomotor.
	A SERVOPACK fault occurred.	–	Turn the power supply OFF and then ON again. If the alarm still occurs, the SERVOPACK may be faulty. Replace the SERVOPACK.

(cont'd)

Alarm Number: Alarm Name (Alarm Description)	Cause	Investigative Actions	Corrective Actions
A.Cb0: Encoder Echoback Error	The wiring and contact for encoder cable are incorrect.	Check the wiring.	Correct the wiring.
	Noise interference occurred due to incorrect cable specifications of encoder cable.	–	Use tinned annealed copper shielded twisted-pair or screened unshielded twisted-pair cable with a core of at least 0.12 mm^2.
	Noise interference occurred because the wiring distance for the encoder cable is too long.	–	The wiring distance must be 50 m max.
	The FG potential varies because of influence from machines on the servomotor side, such as the welder.	Check the cable layout for encoder cable.	Properly ground the machines to separate from encoder FG.
	Excessive vibration and shocks were applied to the encoder.	Check the operating environment.	Reduce the machine vibration or correctly install the servomotor.
	An encoder fault occurred.	–	Turn the power supply OFF and then ON again. If the alarm still occurs, the servomotor may be faulty. Replace the servomotor.
	A SERVOPACK fault occurred.	–	Turn the power supply OFF and then ON again. If the alarm still occurs, the SERVOPACK may be faulty. Replace the SERVOPACK.
A.CC0: Multiturn Limit Disagreement	When using a direct drive (DD) servomotor, the multiturn limit value (Pn205) is different from that of the encoder.	Check the value of the Pn205.	Correct the setting of Pn205 (0 to 65535).
	The multiturn limit value of the encoder is different from that of the SERVOPACK. Or, the multiturn limit value of the SERVOPACK has been changed.	Check the value of the Pn205 of the SERVOPACK.	Execute Fn013 at the occurrence of alarm.
	A SERVOPACK fault occurred.	–	Turn the power supply OFF and then ON again. If the alarm still occurs, the SERVOPACK may be faulty. Replace the SERVOPACK.
A.CF1: Feedback Option Module Communications Error (Reception error)	Wiring of cable between serial converter unit and SERVOPACK is incorrect or contact is faulty.	Check the external encoder wiring.	Correct the cable wiring.
	The specified cable is not used between serial converter unit and SERVOPACK.	Confirm the external encoder wiring specifications.	Use the specified cable.
	Cable between serial converter unit and SERVOPACK is too long.	Measure the length of this cable.	Use 20-m cable max.
	Sheath of cable between serial converter unit and SERVOPACK is broken.	Check the cable for damage.	Replace the cable.
A.CF2: Feedback Option Module Communications Error (Timer stop)	Noise interferes with the cable between serial converter unit and SERVOPACK.	–	Correct the wiring around serial converter unit, e.g., separating I/O signal line from main circuit cable or grounding.
	A serial converter unit fault occurred.	–	Replace the serial converter unit.
	A SERVOPACK fault occurred.	–	Replace the SERVOPACK.

(cont'd)

Alarm Number: Alarm Name (Alarm Description)	Cause	Investigative Actions	Corrective Actions
A.d00: Position Error Overflow (Position error exceeded the value set in the excessive position error alarm level (Pn520).)	The servomotor U, V, and W wirings is faulty.	Check the servomotor main circuit cable connection.	Confirm that there is no contact fault in the motor wiring or encoder wiring.
	The position reference speed is too high.	Reduce the reference speed, and operate the SERVOPACK.	Reduce the position reference speed or acceleration of position reference. Or, reconsider the electronic gear ratio.
	The acceleration of the position reference is too high.	Reduce the reference acceleration, and operate the SERVOPACK.	Reduce the reference acceleration of the position reference using a MECHATROLINK command, or smooth the acceleration of the position reference by selecting the position reference filter (ACCFIL) using a MECHATROLINK command.
	Setting of the excessive position error alarm level (Pn520) is low against the operating condition.	Check the alarm level (Pn520) to see if it is set to an appropriate value.	Set the Pn520 to proper value.
	A SERVOPACK fault occurred.	–	Turn the power supply OFF and then ON again. If the alarm still occurs, the SERVOPACK may be faulty. Replace the SERVOPACK.
A.d01: Position Error Overflow Alarm at Servo ON	This alarm occurs if the servomotor power is turned ON when the position error is greater than the set value of Pn526 while the servomotor power is OFF.	Check the position error amount (Un008) while the servomotor power is OFF.	Correct the excessive position error alarm level at servo ON (Pn526).
A.d02: Position Error Overflow Alarm by Speed Limit at Servo ON	When the position errors remain in the error counter, Pn529 limits the speed if the servomotor power is ON. If Pn529 limits the speed in such a state, this alarm occurs when position references are input and the number of position errors exceeds the value set for the excessive position error alarm level (Pn520).	–	Correct the excessive position error alarm level (Pn520). Or, adjust the speed limit level at servo ON (Pn529).
A.d10: Motor-load Position Error Overflow	Motor rotation direction and external encoder installation direction are opposite.	Check the servomotor rotation direction and the external encoder installation direction.	Install the external encoder in the opposite direction, or change the setting of the external encoder usage method (Pn002.3) to reverse the direction.
	Mounting of the load (e.g., stage) and external encoder joint installation are incorrect.	Check the external encoder mechanical connection.	Check the mechanical joints.
A.E02: MECHATROLINK Internal Synchronization Error 1	MECHATROLINK transmission cycle fluctuated.	–	Remove the cause of transmission cycle fluctuation at host controller.
	A SERVOPACK fault occurred.	–	Turn the power supply OFF and then ON again. If the alarm still occurs, the SERVOPACK may be faulty. Replace the SERVOPACK.
A.E40: MECHATROLINK Transmission Cycle Setting Error	Setting of MECHATROLINK transmission cycle is out of specifications range.	Check the MECHATROLINK transmission cycle setting.	Set the transmission cycle to the proper value.
A.E41: MECHATROLINK Communications Data Size Setting Error	The number of transmission bytes set by the DIP switch S3 is incorrect.	Check the MECHATROLINK communications data size of the host controller.	Reset the setting of the DIP switch S3 to change the number of transmission bytes to the proper value.

(cont'd)

Alarm Number: Alarm Name (Alarm Description)	Cause	Investigative Actions	Corrective Actions
A.E42: MECHATROLINK Station Address Setting Error	The station address is out of the allowable setting range.	Check the rotary switches, S1 and S2, to see if the station address is within the allowable range from 03 to EF.	Check the setting for the station address of the host controller, and reset the setting of the rotary switches, S1 and S2 to change the address to the proper value between 03 and EF.
	Two or more stations on the communications network have the same address.	Check that two or more stations on the communications network have the same address.	Check the setting for the station address of the host controller, and reset the setting of the rotary switches, S1 and S2 to change the address to the proper value between 03 and EF.
A.E50: MECHATROLINK Synchronization Error	WDT data of host controller was not updated correctly.	Check the WDT data updating for the host controller.	Update the WDT data at the host controller correctly.
	A SERVOPACK fault occurred.	–	Turn the power supply OFF and then ON again. If the alarm still occurs, the SERVOPACK may be faulty. Replace the SERVOPACK.
A.E51: MECHATROLINK Synchronization Failed	WDT data of host controller was not updated correctly at the synchronization communications start, and synchronization communications could not start.	Check the WDT data updating for the host controller.	Update the WDT data at the host controller correctly.
	A SERVOPACK fault occurred.	–	Turn the power supply OFF and then ON again. If the alarm still occurs, the SERVOPACK may be faulty. Replace the SERVOPACK.
A.E60: MECHATROLINK Communications error (Reception error)	MECHATROLINK wiring is incorrect.	Check the MECHATROLINK wirings.	Correct the MECHATROLINK wiring. Connect the terminator correctly.
	MECHATROLINK data reception error occurred due to noise interference.	–	Take measures against noise. Check the MECHATROLINK communications cable and FG wiring and take measures such as adding ferrite core on the MECHATROLINK communications cable.
	A SERVOPACK fault occurred.	–	Turn the power supply OFF and then ON again. If the alarm still occurs, the SERVOPACK may be faulty. Replace the SERVOPACK.
A.E61: MECHATROLINK Transmission Cycle Error (Synchronization interval error)	MECHATROLINK transmission cycle fluctuated.	Check the MECHATROLINK transmission cycle setting.	Remove the cause of transmission cycle fluctuation at host controller.
	A SERVOPACK fault occurred.	–	Turn the power supply OFF and then ON again. If the alarm still occurs, the SERVOPACK may be faulty. Replace the SERVOPACK.
A.E62: MECHATROLINK Communications error (FCS error)	MECHATROLINK wiring is incorrect.	Check the MECHATROLINK wirings.	Correct the MECHATROLINK wiring.
	MECHATROLINK data reception error occurred due to noise interference.	–	Take measures against noise. Check the MECHATROLINK communications cable and FG wiring and take measures such as adding ferrite core on the MECHATROLINK communications cable.
	A SERVOPACK fault occurred.	–	Turn the power supply OFF and then ON again. If the alarm still occurs, the SERVOPACK may be faulty. Replace the SERVOPACK.

(cont'd)

Alarm Number: Alarm Name (Alarm Description)	Cause	Investigative Actions	Corrective Actions
A.E63: MECHATROLINK Synchronization Frame Not Received Alarm	MECHATROLINK wiring is incorrect.	Check the MECHATROLINK wirings.	Correct the MECHATROLINK wiring.
	MECHATROLINK data reception error occurred due to noise interference.	–	Take measures against noise. Check the MECHATROLINK communications cable and FG wiring and take measures such as adding ferrite core on the MECHATROLINK communications cable.
	A SERVOPACK fault occurred.	–	Turn the power supply OFF and then ON again. If the alarm still occurs, the SERVOPACK may be faulty. Replace the SERVOPACK.
A.E71: Safety Option Module Detection Failure	The connection between the SERVOPACK and the safety option module is faulty.	Check the connection between the SERVOPACK and the safety option module.	Correctly connect the safety option module.
	The safety option module was disconnected.	–	Execute Fn014 (Resetting configuration error of option module) with using the digital operator or SigmaWin+ and turn the power supply OFF and then ON again.
	A safety option module fault occurred.	–	Replace the safety option module.
	A SERVOPACK fault occurred.	–	Replace the SERVOPACK.
A.E72: Feedback Option Module Detection Failure	The connection between the SERVOPACK and the Feedback Option Module is Faulty.	Check the connection between the SERVOPACK and the Feedback Option Module.	Correctly connect the Feedback Option Module.
	The Feedback Option Module was disconnected.	–	Execute resetting configuration error in option modules (Fn014) and turn the power supply OFF and then ON again.
	A Feedback Option Module fault occurred.	–	Replace the Feedback Option Module.
	A SERVOPACK fault occurred.	–	Replace the SERVOPACK.
A.E74: Unsupported Safety Option Module	A safety option module fault occurred.	–	Replace the safety option module.
	A unsupported safety option module was connected.	Refer to the catalog of the connected safety option module.	Connect a compatible safety option module.
A.E75: Unsupported Feedback Option Module	A feedback option module fault occurred.	–	Replace the feedback option module.
	A unsupported feedback option module was connected.	Refer to the catalog of the connected feedback option module or the manual of the SERVOPACK.	Connect a compatible feedback option module.
A.EA2: DRV Alarm 2 (SERVOPACK WDT error)	MECHATROLINK transmission cycle fluctuated.	Check the MECHATROLINK transmission cycle setting.	Remove the cause of transmission cycle fluctuation at host controller.
	A SERVOPACK fault occurred.	–	Turn the power supply OFF and then ON again. If the alarm still occurs, the SERVOPACK may be faulty. Replace the SERVOPACK.

(cont'd)

Alarm Number: Alarm Name (Alarm Description)	Cause	Investigative Actions	Corrective Actions
A.Eb1: Safety Function Signal Input Timing Error	The lag between activations of the input signals /HWBB1 and /HWBB2 for the HWBB function is ten second or more.	Measure the time lag between the /HWBB1 and /HWBB2 signals.	The output signal circuits or devices for /HWBB1 and /HWBB2 or the SERVOPACK input signal circuits may be faulty. Alternatively, the input signal cables may be disconnected. Check if any of these items are faulty or have been disconnected.
A.Ed1: Command Execution Timeout	A timeout error occurred when using an MECHATROLINK command.	Check the motor status when the command is executed.	Execute the SV_ON or SENS_ON command only when the motor is not running.
		For fully-closed loop control, check the status of the external encoder after an output is made to execute the command.	Execute the SENS_ON command only when an external encoder is connected.
A.F10: Main Circuit Cable Open Phase (With the main power supply ON, voltage was low for more than 1 second in an R, S, or T phase.) (Detected when the main power supply was turned ON.)	The three-phase power supply wiring is incorrect.	Check the power supply wiring.	Confirm that the power supply is correctly wired.
	The three-phase power supply is unbalanced.	Measure the voltage at each phase of the three-phase power supply.	Balance the power supply by changing phases.
	A single-phase power is input without setting Pn00B.2 (power supply method for three-phase SERVOPACK) to 1 (single-phase power supply).	Check the power supply and the parameter setting.	Match the parameter setting to the power supply.
	A SERVOPACK fault occurred.	–	Turn the power supply OFF and then ON again. If the alarm still occurs, the SERVOPACK may be faulty. Replace the SERVOPACK.
A.F50: Servomotor Main Circuit Cable Disconnection (The servomotor did not operate or power was not supplied to the servomotor even though the SV_ON (Servo ON) command was input when the servomotor was ready to receive it.)	A SERVOPACK fault occurred.	–	The SERVOPACK may be faulty. Replace the SERVOPACK.
	The wiring is not correct or there is a faulty contact in the motor wiring.	Check the wiring.	Make sure that the servomotor is correctly wired.
FL-1*2: System Alarm	SERVOPACK failure	–	Turn the power supply OFF and then ON again. If the alarm still occurs, the SERVOPACK may be faulty. Replace the SERVOPACK.
FL-2*2: System Alarm		–	
CPF00: Digital Operator Transmission Error 1	The contact between the digital operator and the SERVOPACK is faulty.	Check the connector contact.	Insert securely the connector or replace the cable.
	Malfunction caused by noise interference.	–	Keep the digital operator or the cable away from noise sources.
CPF01: Digital Operator Transmission Error 2	A digital operator fault occurred.	–	Disconnect the digital operator and then re-connect it. If the alarm still occurs, the digital operator may be faulty. Replace the digital operator.
	A SERVOPACK fault occurred.	–	Turn the power supply OFF and then ON again. If the alarm still occurs, the SERVOPACK may be faulty. Replace the SERVOPACK.

*2. These alarms are not stored in the alarm history and are displayed only in the panel display.

9.2 Warning Displays

The following sections describe troubleshooting in response to warning displays.

The warning name and warning meaning output are listed in order of the warning numbers in *9.2.1 List of Warnings*.

The causes of warnings and troubleshooting methods are provided in *9.2.2 Troubleshooting of Warnings*.

9.2.1 List of Warnings

This section provides list of warnings.

Warning Number	Warning Name	Meaning	Reset
A.900[*1]	Position Error Overflow	Position error exceeded the parameter setting (Pn520×Pn51E/100).	Required
A.901[*1]	Position Error Overflow Alarm at Servo ON	When the servomotor power is ON, the position error exceeded the parameter setting (Pn526×Pn528/100).	Required
A.910[*1]	Overload	This warning occurs before the overload alarms (A.710 or A.720) occur. If the warning is ignored and operation continues, an overload alarm may occur.	Required
A.911[*1]	Vibration	Abnormal vibration at the motor speed was detected. The detection level is the same as A.520. Set whether to output an alarm or warning by the vibration detection switch (Pn310).	Required
A.920[*1]	Regenerative Overload	This warning occurs before the regenerative overload alarm (A.320) occurs. If the warning is ignored and operation continues, a regenerative overload alarm may occur.	Required
A.921[*1]	Dynamic Brake Overload	This warning occurs before dynamic brake overload alarm (A.731) occurs. If the warning is ignored and operation continues, a dynamic brake overload alarm may occur.	Required
A.930[*1]	Absolute Encoder Battery Error	This warning occurs when the voltage of absolute encoder's battery is lowered.	Required
A.94A[*2]	Data Setting Warning 1 (Parameter Number Error)	Incorrect command parameter number was set.	Automatic reset [*4]
A.94B[*2]	Data Setting Warning 2 (Out of Range)	Command input data is out of range.	Automatic reset [*4]
A.94C[*2]	Data Setting Warning 3 (Calculation Error)	Calculation error was detected.	Automatic reset[*4]
A.94D[*2]	Data Setting Warning 4 (Parameter Size)	Data size does not match.	Automatic reset[*4]
A.94E[*2]	Data Setting Warning 5 (Latch Mode Error)	Latch mode error is detected.	Required
A.95A[*2]	Command Warning 1 (Unsatisfying Command)	Command was sent although the conditions for sending a command were not satisfied.	Automatic reset [*4]
A.95B[*2]	Command Warning 2 (Non-supported Command)	Unsupported command was sent.	Automatic reset [*4]
A.95D[*2]	Command Warning 4 (Command Interference)	Command, especially latch command, interferes.	Automatic reset [*4]
A.95E[*2]	Command Warning 5 (Subcommand Disable)	Subcommand and main command interfere.	Automatic reset [*4]
A.95F[*2]	Command Warning 6 (Undefined Command)	Undefined command was sent.	Automatic reset [*4]
A.960[*2]	MECHATROLINK Communications Warning	Communications error occurred during MECHATROLINK communications.	Required

(cont'd)

Warning Number	Warning Name	Meaning	Reset
A.962[*2]	MECHATROLINK Communications Warning (FCS Error)	Communications error occurred during MECHATROLINK communications.	Required
A.963[*2]	MECHATROLINK Communications Warning (Synchronization Frame Not Received)	The synchronization frame was not received during MECHATROLINK communications.	Required
A.971[*3]	Undervoltage	This warning occurs before undervoltage alarm (A.410) occurs. If the warning is ignored and operation continues, an undervoltage alarm may occur.	Required
A.97A[*2]	Command Warning 7 (Phase Error)	A command that cannot be executed in the current phase was sent.	Automatic reset [*4]
A.97B[*2]	Data Clamp (Out of Range)	The set command data was clamped to a minimum or maximum value out of the allowable setting range.	Automatic reset [*4]
A.9A0[*1]	Overtravel	Overtravel is detected while the servomotor power is ON.	Required

*1. Use Pn008.2 to activate or not the warning detection.
*2. Use Pn800.1 to activate or not the warning detection.
*3. Use Pn008.1 to activate or not the warning detection.
*4. If using the commands for the MECHATROLINK-III standard servo profile, the warning will automatically be cleared after the correct command is received.
If using the commands for the MECHATROLINK-II-compatible profile, send a Clear Warning or Alarm command (ALM_CLR) to clear the warning.

9.2.2 Troubleshooting of Warnings

Refer to the following table to identity the cause of a warning and the action to be taken. Contact your Yaskawa representative if the problem cannot be solved by the described corrective action.

Warning Number: Warning Name (Warning Description)	Cause	Investigative Actions	Corrective Actions
A.900: Position Error Overflow	The servomotor U, V, and W wirings is faulty.	Check the servomotor main circuit cable connection.	Confirm that there is no contact fault in the motor wiring or encoder wiring.
	The SERVOPACK gain is too low.	Check the SERVOPACK gain.	Increase the servo gain by using the function such as advanced autotuning.
	The acceleration of the position reference is too high.	Reduce the reference acceleration, and operate the SERVOPACK.	Reduce the reference acceleration of the position reference using a MECHATROLINK command, or smooth the acceleration of the position reference by selecting the position reference filter (ACCFIL) using a MECHATROLINK command.
	Setting of the excessive position error alarm level (Pn520) is low against the operating condition.	Check the alarm level (Pn520) to see if it is set to an appropriate value.	Set the Pn520 to proper value.
	A SERVOPACK fault occurred.	–	Turn the power supply OFF and then ON again. If the alarm still occurs, the SERVOPACK may be faulty. Replace the SERVOPACK.
A.901: Position Error Overflow Alarm at Servo ON	When the servomotor power is ON, the position error exceeded the parameter setting (Pn526×Pn528/100).	–	Set an appropriate value for the excessive position error warning level at servo ON (Pn528).
A.910: Overload (Warning before alarm A.710 or A.720 occurs)	Incorrect wiring or contact fault of servomotor and encoder.	Check the wiring.	Confirm that the servomotor and encoder are correctly wired.
	Operation beyond the overload protection characteristics.	Check the motor overload characteristics and executed run command.	Reconsider the load conditions and operating conditions. Or, increase the motor capacity.
	Excessive load was applied during operation because the servomotor was not driven due to mechanical problems.	Check the executed operation reference and motor speed.	Remove the mechanical problems.
	A SERVOPACK fault occurred.	–	The SERVOPACK may be faulty. Replace the SERVOPACK.
A.911: Vibration	Abnormal vibration was detected at the motor speed.	Check for abnormal noise from the servomotor, and check the speed and torque waveforms during operation.	Reduce the motor speed or reduce the servo gain by using the function such as one-parameter tuning.
	The moment of inertia ratio (Pn103) value is greater than the actual value or is greatly changed.	Check the moment of inertia ratio.	Set the moment of inertia ratio (Pn103) to an appropriate value.

(cont'd)

Warning Number: Warning Name (Warning Description)	Cause	Investigative Actions	Corrective Actions
A.920: Regenerative Overload (Warning before the alarm A.320 occurs)	The power supply voltage exceeds the specified limit.	Measure the power supply voltage.	Set the power supply voltage within the specified range.
	Insufficient external regenerative resistance, regenerative resistor capacity, or SERVOPACK capacity. Or, regenerative power has been continuously flowing back.	Check the operating condition or the capacity using the capacity selection Software SigmaJunmaSize+, etc.	Change the regenerative resistance, regenerative resistor capacity, or SERVOPACK capacity. Reconsider the operating conditions using the capacity selection software SigmaJunmaSize+, etc.
	Regenerative power continuously flowed back because negative load was continuously applied.	Check the load to the servomotor during operation.	Reconsider the system including servo drives, machine, and operating conditions.
A.921: Dynamic Brake Overload (Warning before the alarm A.731 occurs)	The servomotor rotates because of external force.	Check the operation status.	Take measures to ensure the servomotor will not rotate because of external force.
	The rotating energy at a DB stop exceeds the DB resistance capacity.	Check the power consumed by DB resistance (Un00B) to see how many times the DB has been used.	Reconsider the following: • Reduce the motor reference speed. • Reduce the moment of inertia ratio. • Reduce the number of times of the DB stop operation.
	A SERVOPACK fault occurred.	–	The SERVOPACK may be faulty. Replace the SERVOPACK.
A.930: Absolute Encoder Battery Error (The absolute encoder battery voltage is lower than the specified value.) * Only when an absolute encoder is connected.	The battery connection is incorrect.	Check the battery connection.	Reconnect the battery.
	The battery voltage is lower than the specified value 2.7 V.	Measure the battery voltage.	Replace the battery.
	A SERVOPACK fault occurred.	–	The SERVOPACK may be faulty. Replace the SERVOPACK.
A.94A Data Setting Warning 1 (Parameter Number Error)	Disabled parameter number was used.	Refer to *9.3 Monitoring Communication Data on Occurrence of an Alarm or Warning* to determine which command was the cause of the warning.	Use the correct parameter number.
A.94B Data Setting Warning 2 (Out of Range)	Attempted to send values outside the range to the command data.	Refer to *9.3 Monitoring Communication Data on Occurrence of an Alarm or Warning* to determine which command was the cause of the warning.	Set the value of the parameter within the allowable range.
A.94C Data Setting Warning 3 (Calculation Error)	Calculation result of set value is incorrect.	Refer to *9.3 Monitoring Communication Data on Occurrence of an Alarm or Warning* to determine which command was the cause of the warning.	Set the value of the parameter within the allowable range.
A.94D Data Setting Warning 4 (Parameter Size)	Parameter size set in command is incorrect.	Refer to *9.3 Monitoring Communication Data on Occurrence of an Alarm or Warning* to determine which command was the cause of the warning.	Use the correct parameter size.

(cont'd)

Warning Number: Warning Name (Warning Description)	Cause	Investigative Actions	Corrective Actions
A.94E Data Setting Warning 5 (Latch mode error)	Latch mode error is detected.	Refer to *9.3 Monitoring Communication Data on Occurrence of an Alarm or Warning* to determine which command was the cause of the warning.	Change the setting value of Pn850 or the LT_MOD data for the LTMOD_ON command sent by the host controller to the proper value. (When using the MECHATROLINK-II-compatible profile.)
A.95A Command Warning 1 (Unsatisfying Command)	Command sending condition is not satisfied.	Refer to *9.3 Monitoring Communication Data on Occurrence of an Alarm or Warning* to determine which command was the cause of the warning.	Send a command after command sending condition is satisfied.
A.95B Command Warning 2 (Non-supported Command)	SERVOPACK received unsupported command.	Refer to *9.3 Monitoring Communication Data on Occurrence of an Alarm or Warning* to determine which command was the cause of the warning.	Do not sent an unsupported command.
A.95D Command Warning 4 (Command Interference)	Command sending condition for latch-related commands is not satisfied.	Refer to *9.3 Monitoring Communication Data on Occurrence of an Alarm or Warning* to determine which command was the cause of the warning.	Send a command after command sending condition is satisfied.
A.95E Command Warning 5 (Subcommand Disable)	Subcommand sending condition is not satisfied.	Refer to *9.3 Monitoring Communication Data on Occurrence of an Alarm or Warning* to determine which command was the cause of the warning.	Send a command after command sending condition is satisfied.
A.95F Command Warning 6 (Undefined Command)	Undefined command was sent.	Refer to *9.3 Monitoring Communication Data on Occurrence of an Alarm or Warning* to determine which command was the cause of the warning.	Do not use an undefined command.
A.960 MECHATROLINK Communications Warning	MECHATROLINK wiring is incorrect.	Confirm the wiring.	Correct the MECHATROLINK wiring. Or, connect a terminal to the terminal station.
	MECHATROLINK data reception error occurred due to noise interference.	Confirm the installation conditions.	Take measures against noise. Check the MECHATROLINK communications cable and FG wiring and take measures such as adding ferrite core on the MECHATROLINK communications cable.
	A SERVOPACK fault occurred.	–	A fault occurred in the SERVOPACK. Replace the SERVOPACK.

(cont'd)

Warning Number: Warning Name (Warning Description)	Cause	Investigative Actions	Corrective Actions
A.962 MECHATROLINK Communications Warning (FCS Error)	MECHATROLINK wiring is incorrect.	Confirm the wiring.	Correct the MECHATROLINK wiring. Or, connect a terminal to the terminal station.
	MECHATROLINK data reception error occurred due to noise interference.	Confirm the installation conditions.	Take measures against noise. Check the MECHATROLINK communications cable and FG wiring and take measures such as adding ferrite core on the MECHATROLINK communications cable.
	A SERVOPACK fault occurred.	–	A fault occurred in the SERVOPACK. Replace the SERVOPACK.
A.963 MECHATROLINK Communications Warning (Synchronization Frame Not Received)	MECHATROLINK wiring is incorrect.	Confirm the wiring.	Correct the MECHATROLINK wiring. Or, connect a terminal to the terminal station.
	MECHATROLINK data reception error occurred due to noise interference.	Confirm the installation conditions.	Take measures against noise. Check the MECHATROLINK communications cable and FG wiring and take measures such as adding ferrite core on the MECHATROLINK communications cable.
	A SERVOPACK fault occurred.	–	A fault occurred in the SERVOPACK. Replace the SERVOPACK.
A.971: Undervoltage	• For 100 VAC SERVOPACKs: The AC power supply voltage is 60 V or less. • For 200-VAC SERVOPACKs: The AC power supply voltage is 140 V or less. • For 400-VAC SERVOPACKs: The AC power supply voltage is 280 V or less.	Measure the power supply voltage.	Set the power supply voltage within the specified range.
	The power supply voltage dropped during operation.	Measure the power supply voltage.	Increase the power supply capacity.
	Occurrence of instantaneous power interruption.	Measure the power supply voltage.	When the instantaneous power cut hold time (Pn509) is set, decrease the setting.
	The SERVOPACK fuse is blown out.	–	Replace the SERVOPACK and connect a reactor to the SERVOPACK.
	A SERVOPACK fault occurred.	–	The SERVOPACK may be faulty. Replace the SERVOPACK.

(cont'd)

Warning Number: Warning Name (Warning Description)	Cause	Investigative Actions	Corrective Actions
A.97A Command Warning 7 (Phase Error)	A command that cannot be executed in the current phase was sent.	–	Send a command after command sending condition is satisfied.
A.97B Data Clamp (Out Of Range)	The set command data was clamped to a minimum or maximum value out of the allowable setting range.	–	Set the value of the command data within the allowable range.
A.9A0: Overtravel (Overtravel status is detected.)	When the servomotor power is ON, overtravel status is detected.	Check the input signal monitor (Un005) to check the status of the overtravel signals.	Refer to *9.4 Troubleshooting Malfunction Based on Operation and Conditions of the Servomotor*. Even if overtravel signals were not shown by the input signal monitor (Un005), momentary overtravel may have been detected. Take the following precautions. • Do not specify movements that would cause overtravel from the host controller. • Check the wiring of the overtravel signals. • Take countermeasures for noise.

9.3 Monitoring Communication Data on Occurrence of an Alarm or Warning

The command data received on occurrence of an alarm or warning, such as a data setting warning (A.94□) or a command warning (A.95□) can be monitored using the following parameters. The following is an example of the data when an alarm/warning has occurred in the normal state.

Command Data Monitor at Alarm/Warning Occurrence: Pn890 to Pn8A6
Response Data Monitor at Alarm/Warning Occurrence: Pn8A8 to Pn8BE

Command Byte Order	Command Data Storage at Alarm/Warning Occurrence	
	CMD	RSP
0	Pn890.1 to 0	Pn8A8.1 to 0
1	Pn890.3 to 2	Pn8A8.3 to 2
2	Pn890.5 to 4	Pn8A8.5 to 4
3	Pn890.7 to 6	Pn8A8.7 to 6
4 to 7	Pn892	Pn8AA
8 to 11	Pn894	Pn8AC
12 to 15	Pn896	Pn8AE
16 to 19	Pn898	Pn8B0
20 to 23	Pn89A	Pn8B2
24 to 27	Pn89C	Pn8B4
28 to 31	Pn89E	Pn8B6
32 to 35	Pn8A0	Pn8B8
36 to 39	Pn8A2	Pn8BA
40 to 43	Pn8A4	Pn8BC
44 to 47	Pn8A6	Pn8BE

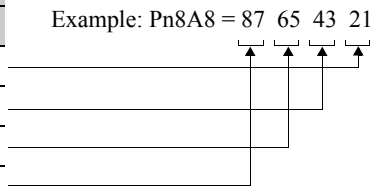

Note 1. Data is stored in little endian byte order and displayed in the hexadecimal format.
2. For details on commands, refer to *Σ-V Series User's Manual, MECHATROLINK-III Standard Servo Profile Commands* (No.: SIEP S800000 63)

9.4 Troubleshooting Malfunction Based on Operation and Conditions of the Servomotor

Troubleshooting for the malfunctions based on the operation and conditions of the servomotor is provided in this section.

Be sure to turn OFF the servo system before troubleshooting items shown in bold lines in the table.

Problem	Probable Cause	Investigative Actions	Corrective Actions
Servomotor Does Not Start	The control power supply is not ON.	Check voltage between control power terminals.	Correct the wiring.
	The main circuit power supply is not ON.	Check the voltage between main circuit power terminals.	Correct the wiring.
	Wiring of I/O signal connector CN1 is faulty or disconnected.	Check if the connector CN1 is properly inserted and connected.	Correct the connector CN1 connection.
	Wiring for servomotor main circuit cable or encoder cable is disconnected.	Check the wiring.	Correct the wiring.
	Overloaded	Run under no load and check the load status.	Reduce load or replace with larger capacity servomotor.
	Encoder type differs from parameter setting (Pn002.2).	Check the settings for parameter Pn002.2.	Set parameter Pn002.2 to the encoder type being used.
	Settings for the input signal selections (Pn50A, Pn50B and Pn511) is incorrect.	Check the settings for parameters Pn50A, Pn50B and Pn511.	Correct the settings for parameter Pn50A, Pn50B and Pn511.
	SV_ON command is not sent.	Check the command sent from the host controller.	Send the SV_ON command.
	SENS_ON command is not sent.	Check the command sent from the host controller.	Send the command in the correct SERVOPACK sequence.
	The forward run prohibited (P-OT) and reverse run prohibited (N-OT) input signals are turned OFF.	Check P-OT or N-OT input signal.	Turn P-OT or N-OT input signal ON.
	The safety input signal (/HWBB1 or /HWBB2) remains OFF.	Check the /HWBB1 and /HWBB2 input signal.	Set the /HWBB1 and /HWBB2 input signal to ON. When not using the safety function, mount the safety function's jumper connector (provided as an accessory) on the CN8.
	A SERVOPACK fault occurred.	–	Replace the SERVOPACK.
Servomotor Moves Instantaneously, and then Stops	Servomotor wiring is incorrect.	Check the wiring.	Correct the wiring.
	Encoder wiring is incorrect.	Check the wiring.	Correct the wiring.
Servomotor Speed Unstable	Wiring connection to servomotor is defective.	Check connections of power line (phases U, V, and W) and encoder connectors.	Tighten any loose terminals or connectors and correct the wiring.
Servomotor Rotates Without Reference Input	A SERVOPACK fault occurred.	–	Replace the SERVOPACK.
Dynamic Brake Does Not Operate	Improper Pn001.0 setting	Check the setting for parameter Pn001.0.	Correct the setting for parameter Pn001.0.
	DB resistor disconnected	Check if excessive moment of inertia, motor overspeed, or DB frequently activated occurred.	Replace the SERVOPACK, and reduce the load.
	DB drive circuit fault	–	There is a defective component in the DB circuit. Replace the SERVOPACK.

(cont'd)

Problem	Probable Cause	Investigative Actions	Corrective Actions
Abnormal Noise from Servomotor	The servomotor largely vibrated during execution of tuning-less function.	Check the motor speed waveform.	Reduce the load so that the moment of inertia ratio becomes within the allowable value, or increase the load level or lower the tuning level for the tuning-less levels setting (Fn200).
	Mounting is not secured.	Check if there are any loose mounting screws.	Tighten the mounting screws.
		Check if there is misalignment of couplings.	Align the couplings.
		Check if there are unbalanced couplings.	Balance the couplings.
	Bearings are defective.	Check for noise and vibration around the bearings.	Replace the servomotor.
	Vibration source at the driven machine.	Check for any foreign matter, damage, or deformations on the machinery's movable parts.	Contact the machine manufacturer.
	Noise interference due to incorrect I/O signal cable specifications.	The I/O signal cable must be tinned annealed copper shielded twisted-pair or screened unshielded twisted-pair cable with a core of 0.12 mm^2 min.	Use the specified I/O signal cable.
	Noise interference due to length of I/O signal cable.	Check the length of the I/O signal cable.	The I/O signal cable length must be no more than 3 m.
	Noise interference due to incorrect cable specifications of encoder cable.	The encoder cable must be tinned annealed copper shielded twisted-pair or screened unshielded twisted-pair cable with a core of 0.12 mm^2 min.	Use the specified encoder cable.
	Noise interference due to length of encoder cable.	Check the length of the encoder cable.	The encoder cable must be no more than 50 m.
	Noise interference due to damaged encoder cable.	Check if the encoder cable is bent and the sheath is damaged.	Replace the encoder cable and correct the cable layout.
	Excessive noise to the encoder cable.	Check if the encoder cable is bundled with a high-current line or near a high-current line.	Correct the cable layout so that no surge is applied.
	The FG potential varies because of influence from machines on the servomotor side, such as the welder.	Check if the machines are correctly grounded.	Properly ground the machines to separate from the encoder FG.
	SERVOPACK pulse counting error due to noise interference	Check if there is noise interference on the I/O signal line from the encoder.	Take measures against noise in the encoder wiring.
	Excessive vibration and shock to the encoder	Check if vibration from the machine occurred or servomotor installation is incorrect (mounting surface accuracy, fixing, alignment, etc.).	Reduce vibration from the machine, or secure the servomotor installation.
	An encoder fault occurred.	–	Replace the servomotor.

(cont'd)

Problem	Probable Cause	Investigative Actions	Corrective Actions
Servomotor Vibrates at Frequency of Approx. 200 to 400 Hz.	Unbalanced servo gains	Check to see if the servo gains have been correctly adjusted.	Execute the advanced autotuning.
	Speed loop gain value (Pn100) too high.	Check the speed loop gain (Pn100). Factory setting: Kv = 40.0 Hz	Reduce the speed loop gain (Pn100).
	Position loop gain value (Pn102) too high.	Check the position loop gain (Pn102). Factory setting: Kp = 40.0/s	Reduce the position loop gain (Pn102).
	Incorrect speed loop integral time constant (Pn101)	Check the speed loop integral time constant (Pn101). Factory setting: Ti = 20.0 ms	Correct the speed loop integral time constant (Pn101).
	Incorrect moment of inertia ratio (Pn103)	Check the moment of inertia ratio (Pn103).	Correct the moment of inertia ratio (Pn103).
High Motor Speed Overshoot on Starting and Stopping	Unbalanced servo gains	Check to see if the servo gains have been correctly adjusted.	Execute the advanced autotuning.
	Speed loop gain value (Pn100) too high	Check the speed loop gain (Pn100). Factory setting: Kv = 40.0 Hz	Reduce the speed loop gain (Pn100).
	Position loop gain value (Pn102) too high	Check the position loop gain (Pn102). Factory setting: Kp = 40.0/s	Reduce the position loop gain (Pn102).
	Incorrect speed loop integral time constant (Pn101)	Check the speed loop integral time constant (Pn101). Factory setting: Ti = 20.0 ms	Correct the speed loop integral time constant (Pn101).
	Incorrect moment of inertia ratio data (Pn103)	Check the moment of inertia ratio (Pn103).	Correct the moment of inertia ratio (Pn103).
Absolute Encoder Position Difference Error (The position saved in the host controller when the power was turned OFF is different from the position when the power was next turned ON.)	Noise interference due to incorrect cable specifications of encoder cable.	The encoder cable must be tinned annealed copper shielded twisted-pair or screened unshielded twisted-pair cable with a core of 0.12 mm^2 min.	Use the specified encoder cable.
	Noise interference due to length of encoder cable.	Check the length of the encoder cable.	The encoder cable must be no more than 50 m.
	Noise interference due to damaged encoder cable.	Check if the encoder cable is bent and the sheath is damaged.	Replace the encoder cable and correct the cable layout.
	Excessive noise to the encoder cable.	Check if the encoder cable is bundled with a high-current line or near a high-current line.	Correct the cable layout so that no surge is applied.
	FG potential varies because of influence of machines such as welders at the servomotor.	Check if the machines are correctly grounded.	Ground machines correctly, and prevent diversion to the FG on the encoder side.
	SERVOPACK pulse counting error due to noise interference	Check if there is noise interference on the I/O signal line from the encoder.	Take measures against noise in the encoder wiring.
	Excessive vibration and shock to the encoder	Check if vibration from the machine occurred or servomotor installation is incorrect (mounting surface accuracy, fixing, alignment, etc.).	Reduce vibration from the machine, or secure the servomotor installation.
	An encoder fault occurred.	–	Replace the servomotor.
	A SERVOPACK fault occurred. (The pulse count does not change.)	–	Replace the SERVOPACK.
	Host controller multiturn data reading error	Check the error detection section of the host controller.	Correct the error detection section of the host controller.
		Check if the host controller is executing data parity checks.	Execute a multiturn data parity check.
		Check noise in the cable between the SERVOPACK and the host controller.	Take measures against noise, and again execute a multiturn data parity check.

(cont'd)

Problem	Probable Cause	Investigative Actions	Corrective Actions
Overtravel (OT)	Forward or reverse run prohibited signal is input.	Check the external power supply (+24 V) voltage for the input signal.	Correct the external power supply (+24 V) voltage.
		Check if the overtravel limit switch operates properly.	Correct the overtravel limit switch.
		Check if the overtravel limit switch is wired correctly.	Correct the overtravel limit switch wiring.
		Check the settings for parameters Pn50A and Pn50B.	Correct the settings for parameters Pn50A and Pn50B.
	Forward or reverse run prohibited signal malfunctioning.	Check the fluctuation of the external power supply (+24 V) voltage for the input signal.	Stabilize the external power supply (+24 V) voltage.
		Check if the overtravel limit switch operates correctly.	Correct the overtravel limit switch.
		Check if the overtravel limit switch wiring is correct. (check for damaged cables or loose screws.)	Correct the overtravel limit switch wiring.
	Incorrect forward or reverse run prohibited signal (P-OT/N-OT) allocation (parameters Pn50A.3, Pn50B.0)	Check if the P-OT signal is allocated in Pn50A.3.	If another signal is allocated in Pn50A.3, allocate P-OT.
		Check if the N-OT signal is allocated in Pn50B.0.	If another signal is allocated in Pn50B.0, allocate N-OT.
	Incorrect servomotor stop method selection	Check the settings for parameters Pn001.0 and Pn001.1 when the servomotor power is OFF.	Select a servomotor stop method other than "coast to stop."
		Check the settings for parameters Pn001.0 and Pn001.1 when in torque control.	Select a servomotor stop method other than "coast to stop."
Improper Stop Position by Overtravel (OT) Signal	Improper limit switch position and dog length	–	Install the limit switch at the appropriate position.
	The overtravel limit switch position is too short for the coasting distance.	–	Install the overtravel limit switch at the appropriate position.

(cont'd)

Problem	Probable Cause	Investigative Actions	Corrective Actions
Position Error (Without Alarm)	Noise interference due to incorrect encoder cable specifications	The encoder cable must be tinned annealed copper shielded twisted-pair or screened unshielded twisted-pair cable with a core of 0.12 mm^2 min.	Use the specified encoder cable.
	Noise interference due to length of encoder cable.	Check the length of the encoder cable.	The encoder cable must be no more than 50 m.
	Noise influence due to damaged encoder cable.	Check if the encoder cable is bent and the sheath is damaged.	Replace the encoder cable and modify the cable layout.
	Excessive noise to encoder cable.	Check if the encoder cable is bundled with a high-current line or near a high-current line.	Change the cable layout so that no surge is applied.
	The FG potential varies because of influence from machines on the servomotor side such as the welder.	Check if the machines are correctly grounded.	Properly ground the machines encoder FG.
	SERVOPACK pulse count error due to noise	Check if the I/O signal line from the encoder is influenced by noise.	Take measures against noise in the encoder wiring.
	Excessive vibration and shock to the encoder	Check if vibration from the machine occurred or servomotor installation is incorrect (mounting surface accuracy, fixing, alignment, etc.).	Reduce the machine vibration or mount the servomotor securely.
	Unsecured coupling between machine and servomotor	Check if a position error occurs at the coupling between machine and servomotor.	Secure the coupling between the machine and servomotor.
	Noise interference due to improper I/O signal cable specifications	The I/O signal cable must be tinned annealed copper shielded twisted-pair or screened unshielded twisted-pair cable with a core of 0.12 mm^2 min.	Use input signal cable with the specified specifications.
	Noise interference due to length of I/O signal cable	Check the I/O signal cable length.	The I/O signal cable length must be no more than 3 m.
	An encoder fault occurred. (The pulse count does not change.)	–	Replace the servomotor.
	A SERVOPACK fault occurred.	–	Replace the SERVOPACK.
Servomotor Overheated	Ambient operating temperature too high	Measure the servomotor ambient operating temperature.	Reduce the ambient operating temperature to 40°C or less.
	Servomotor surface dirty	Visually check the surface.	Clean dust and oil from the surface.
	Servomotor overloaded	Check the load status with monitor.	If overloaded, reduce load or replace with larger capacity SERVOPACK and servomotor.

10

Appendix

10.1 List of Parameters 10-2
10.1.1 Utility Functions 10-2
10.1.2 Parameters 10-3
10.1.3 MECHATROLINK-III Common Parameters 10-37
10.2 List of Monitor Displays 10-45
10.3 Parameter Recording Table 10-46

10.1 List of Parameters

10.1.1 Utility Functions

The following list shows the available utility functions.

Parameter No.	Function	Reference Section
Fn000	Alarm history display	6.2
Fn002	JOG operation	6.3
Fn003	Origin search	6.4
Fn004	Program JOG operation	6.5
Fn005	Initializing parameter settings	6.6
Fn006	Clearing alarm history	6.7
Fn008	Absolute encoder multiturn reset and encoder alarm reset	4.7.4
Fn00C	Offset adjustment of analog monitor output	6.8
Fn00D	Gain adjustment of analog monitor output	6.9
Fn00E	Automatic offset-signal adjustment of the motor current detection signal	6.10
Fn00F	Manual offset-signal adjustment of the motor current detection signal	6.11
Fn010	Write prohibited setting	6.12
Fn011	Servomotor model display	6.13
Fn012	Software version display	6.14
Fn013	Multiturn limit value setting change when a multiturn limit disagreement alarm occurs	4.7.7
Fn014	Resetting configuration error in option modules	6.15
Fn01B	Vibration detection level initialization	6.16
Fn01E	Display of SERVOPACK and servomotor ID	6.17
Fn01F	Display of servomotor ID in feedback option module	6.18
Fn020	Origin setting	6.19
Fn030	Software reset	6.20
Fn200	Tuning-less levels setting	5.2.2
Fn201	Advanced autotuning	5.3.2
Fn202	Advanced autotuning by reference	5.4.2
Fn203	One-parameter tuning	5.5.2
Fn204	Anti-resonance control adjustment function	5.6.2
Fn205	Vibration suppression function	5.7.2
Fn206	EasyFFT	6.21
Fn207	Online vibration monitor	6.22

Note: Execute the utility function with either a digital operator or SigmaWin+. If they are used together, "no_oP" or "NO-OP" will be displayed when the utility function is executed.

10.1.2 Parameters

Parameter No.	Size	Name	Setting Range	Units	Factory Setting	When Enabled	Classi-fication	Profile	Reference Section
Pn000	2	Basic Function Select Switch 0	0000 to 00B3	–	0000	After restart	Setup	–	–
Pn001	2	Application Function Select Switch 1	0000 to 1122	–	0000	After restart	Setup	–	–

Pn000

n. □ □ □ □ (4th digit, 3rd digit, 2nd digit, 1st digit)

Direction Selection		Reference Section
0	Sets CCW as forward direction.	4.3.1
1	Sets CW as forward direction. (Reverse Rotation Mode)	
2 to 3	Reserved (Do not change.)	

Reserved (Do not change.)

Reserved (Do not change.)

Reserved (Do not change.)

Pn001

n. □ □ □ □ (4th digit, 3rd digit, 2nd digit, 1st digit)

Servomotor power OFF or Alarm Gr.1 Stop Mode		Reference Section
0	Stops the servomotor by applying DB (dynamic brake).	4.3.5
1	Stops the servomotor by applying DB and then releases DB.	
2	Makes the servomotor coast to a stop state without using the DB.	

Overtravel (OT) Stop Mode		Reference Section
0	Stops in accordance with the setting of Pn001.0.	4.3.2
1	Sets the torque of Pn406 to the maximum value, decelerates the servomotor to a stop, and then sets it to servolock state.	
2	Sets the torque of Pn406 to the maximum value, decelerates the servomotor to a stop, and then sets it to coasting state.	

AC/DC Power Input Selection		Reference Section
0	Applicable to AC power input: Input AC power supply through L1, L2, and L3 terminals.	3.1.4
1	Applicable to DC power input: Input DC power supply between B1/ + and –2, or input DC power supply between B1/ + and –.	

Reserved (Do not change.)

(cont'd)

Parameter No.	Size	Name	Setting Range	Units	Factory Setting	When Enabled	Classi-fication	Profile	Reference Section
Pn002	2	Application Function Select Switch 2	0000 to 4113	–	0011	After restart	Setup	–	–

n. □ □ □ □ (4th digit, 3rd digit, 2nd digit, 1st digit)

MECHATROLINK Command Position and Speed Control Option		Reference Section
0	Reserved (Do not set.)	*1
1	TLIM operates as the torque limit values.	
2	Reserved (Do not set.)	
3	Reserved (Do not set.)	

Torque Control Option		Reference Section
0	Reserved (Do not set.)	*1
1	VLIM operates as the speed limit value.	

Absolute Encoder Usage		Reference Section
0	Uses absolute encoder as an absolute encoder.	4.7
1	Uses absolute encoder as an incremental encoder.	

External Encoder Usage		Reference Section
0	Do not use external encoder.*	8.3.1
1	Uses external encoder in forward rotation direction.	
2	Reserved (Do not change.)	
3	Uses external encoder in reversed rotation direction.	
4	Reserved (Do not change.)	

*The mode will be switched to semi-closed position control if Pn002.3 is set to 0.

*1. For details, refer to *Σ-V Series User's Manual MECHATROLINK-III Standard Servo Profile Commands* (No.: SIEP S800000 63).

(cont'd)

Parameter No.	Size	Name	Setting Range	Units	Factory Setting	When Enabled	Classification	Profile	Reference Section
Pn006	2	Application Function Select Switch 6	0000 to 005F	–	0002	Immediately	Setup	–	5.1.3

n. □ □ □ □ (4th digit, 3rd digit, 2nd digit, 1st digit)

Analog Monitor 1 Signal Selection

00	Motor rotating speed (1 V / 1000 min^{-1})
01	Speed reference (1 V / 1000 min^{-1})
02	Torque reference (1 V/100% rated torque)
03	Position error (0.05 V/1 reference unit)
04	Position amplifier error (after electronic gears) (0.05 V/ 1 encoder pulse unit)
05	Position reference speed (1 V / 1000 min^{-1})
06	Reserved (Do not use.)
07	Motor-load position error (0.01 V/1 reference unit)
08	Positioning completion (positioning completed: 5 V, positioning not completed: 0 V)
09	Speed feedforward (1 V / 1000 min^{-1})
0A	Torque feedforward (1 V/100% rated torque)
0B	Active gain (1st gain: 1 V, 2nd gain: 2 V)
0C	Completion of position reference (completed: 5 V, not completed: 0 V)
0D	External encoder speed (1 V / 1000 min^{-1}: Values at motor shaft)

Reserved (Do not change.)

Reserved (Do not change.)

Parameter No.	Size	Name	Setting Range	Units	Factory Setting	When Enabled	Classification	Profile	Reference Section
Pn007	2	Application Function Select Switch 7	0000 to 005F	–	0000	Immediately	Setup	–	5.1.3

n. □ □ □ □ (4th digit, 3rd digit, 2nd digit, 1st digit)

Analog Monitor 2 Signal Selection

00	Motor rotating speed (1 V / 1000 min^{-1})
01	Speed reference (1 V / 1000 min^{-1})
02	Torque reference (1 V/100% rated torque)
03	Position error (0.05 V/1 reference unit)
04	Position amplifier error (after electronic gears) (0.05 V/ 1 encoder pulse unit)
05	Position reference speed (1 V / 1000 min^{-1})
06	Reserved (Do not use.)
07	Motor-load position error (0.01 V/1 reference unit)
08	Positioning completion (positioning completed: 5 V, positioning not completed: 0 V)
09	Speed feedforward (1 V / 1000 min^{-1})
0A	Torque feedforward (1 V/100% rated torque)
0B	Active gain (1st gain: 1 V, 2nd gain: 2 V)
0C	Completion of position reference (completed: 5 V not completed: 0 V)
0D	External encoder speed (1 V / 1000 min^{-1}: Values at motor shaft)

Reserved (Do not change.)

Reserved (Do not change.)

(cont'd)

Parameter No.	Size	Name	Setting Range	Units	Factory Setting	When Enabled	Classi-fication	Profile	Reference Section
Pn008	2	Application Function Select Switch 8	0000 to 7121	–	4000	After restart	Setup	–	–

n. □ □ □ □ (4th digit, 3rd digit, 2nd digit, 1st digit)

Lowered Battery Voltage Alarm/Warning Selection		Reference Section
0	Outputs alarm (A.830) for lowered battery voltage.	4.7.3
1	Outputs warning (A.930) for lowered battery voltage.	

Function Selection for Undervoltage		Reference Section
0	Does not detect undervoltage.	4.3.7
1	Detects warning and limits torque by host controller.	
2	Detects warning and limits torque by Pn424 and Pn425. (Only in the SERVOPACK)	

Warning Detection Selection		Reference Section
0	Detects warning.	9.2.1
1	Does not detect warning (except for A.971).	

Reserved (Do not change.)

Parameter No.	Size	Name	Setting Range	Units	Factory Setting	When Enabled	Classi-fication	Profile	Reference Section
Pn009	2	Application Function Select Switch 9	0000 to 0111	–	0010	After restart	Tuning	–	–

n. □ □ □ □ (4th digit, 3rd digit, 2nd digit, 1st digit)

Reserved (Do not change.)

Current Control Method Selection		Reference Section
0	Current control method 1	5.8.3
1	Current control method 2	

Speed Detection Method Selection		Reference Section
0	Speed detection 1	5.8.5
1	Speed detection 2	

Reserved (Do not change.)

(cont'd)

Parameter No.	Size	Name	Setting Range	Units	Factory Setting	When Enabled	Classification	Profile	Reference Section
Pn00B	2	Application Function Select Switch B	0000 to 1111	–	0000	After restart	Setup	–	–

n. □ □ □ □ (4th digit, 3rd digit, 2nd digit, 1st digit)

Parameter Display Selection		Reference Section
0	Setup parameters	2.4.1
1	All parameters	

Alarm Gr.2 Stop Method Selection		Reference Section
0	Stops the motor by setting the speed reference to "0".	4.3.5
1	Same setting as Pn001.0 (Stops the motor by applying DB or by coasting).	

Power Supply Method for Three-phase SERVOPACK		Reference Section
0	Three-phase power supply	3.1.3
1	Single-phase power supply	

Reserved (Do not change.)

Parameter No.	Size	Name	Setting Range	Units	Factory Setting	When Enabled	Classification	Profile	Reference Section
Pn00C	2	Application Function Select Switch C	0000 to 0111	–	0000	After restart	Setup	–	4.5, 4.5.1

n. □ □ □ □ (4th digit, 3rd digit, 2nd digit, 1st digit)

Selection of Test without a Motor	
0	Disables test without a motor.
1	Enables test without a motor.

Encoder Resolution for Test without a Motor	
0	13 bits
1	20 bits

Encoder Type for Test without a Motor	
0	Incremental encoder
1	Absolute encoder

Reserved (Do not change.)

(cont'd)

Parameter No.	Size	Name	Setting Range	Units	Factory Setting	When Enabled	Classi-fication	Profile	Reference Section
Pn00D	2	Application Function Select Switch D	0000 to 1001	–	0000	Immediately	Setup	–	–

n. □ □ □ □ (4th digit, 3rd digit, 2nd digit, 1st digit)

- 1st digit: Reserved (Do not change.)
- 2nd digit: Reserved (Do not change.)
- 3rd digit: Reserved (Do not change.)
- 4th digit: Overtravel Warning Detection Selection (Reference Section: 4.3.2)
  - 0: Does not detect overtravel warning.
  - 1: Detects overtravel warning.

Parameter No.	Size	Name	Setting Range	Units	Factory Setting	When Enabled	Classi-fication	Profile	Reference Section
Pn081	2	Application Function Select Switch 81	0000 to 1111	–	0000	After restart	Setup	–	8.1.5

n. □ □ □ □ (4th digit, 3rd digit, 2nd digit, 1st digit)

- 1st digit: Phase-C Pulse Output Selection
  - 0: Outputs phase-C pulse only in forward direction.
  - 1: Outputs phase-C pulse in forward and reverse direction.
- 2nd digit: Reserved (Do not change.)
- 3rd digit: Reserved (Do not change.)
- 4th digit: Reserved (Do not change.)

Parameter No.	Size	Name	Setting Range	Units	Factory Setting	When Enabled	Classi-fication	Profile	Reference Section
Pn100	2	Speed Loop Gain	10 to 20000	0.1 Hz	400	Immediately	Tuning	–	5.8.1
Pn101	2	Speed Loop Integral Time Constant	15 to 51200	0.01 ms	2000	Immediately	Tuning	–	
Pn102	2	Position Loop Gain	10 to 20000	0.1/s	400	Immediately	Tuning	–	
Pn103	2	Moment of Inertia Ratio	0 to 20000	1%	100	Immediately	Tuning	–	
Pn104	2	2nd Speed Loop Gain	10 to 20000	0.1 Hz	400	Immediately	Tuning	–	
Pn105	2	2nd Speed Loop Integral Time Constant	15 to 51200	0.01 ms	2000	Immediately	Tuning	–	
Pn106	2	2nd Position Loop Gain	10 to 20000	0.1/s	400	Immediately	Tuning	–	
Pn109	2	Feedforward Gain	0 to 100	1%	0	Immediately	Tuning	–	5.9.1
Pn10A	2	Feedforward Filter Time Constant	0 to 6400	0.01 ms	0	Immediately	Tuning	–	

(cont'd)

Parameter No.	Size	Name	Setting Range	Units	Factory Setting	When Enabled	Classi-fication	Profile	Reference Section
Pn10B	2	Application Function for Gain Select Switch	0000 to 5334	–	0000	–	–	–	–

n. □ □ □ □ (4th digit, 3rd digit, 2nd digit, 1st digit)

Mode Switch Selection		When Enabled	Classification	Reference Section
0	Uses internal torque reference as the condition (Level setting: Pn10C).	Immediately	Setup	5.9.2
1	Uses speed reference as the condition (Level setting: Pn10D).			
2	Uses acceleration as the condition (Level setting: Pn10E).			
3	Uses position error as the condition (Level setting: Pn10F).			
4	No mode switch function available.			

Speed Loop Control Method		When Enabled	Classification	Reference Section
0	PI control	After restart	Setup	–
1	I-P control			
2 to 3	Reserved (Do not change.)			

Reserved (Do not change.)

Reserved (Do not change.)

Pn10C	2	Mode Switch (torque reference)	0 to 800	1%	200	Immediately	Tuning	–	5.9.2
Pn10D	2	Mode Switch (speed reference)	0 to 10000	1 min^{-1}	0	Immediately	Tuning	–	
Pn10E	2	Mode Switch (acceleration)	0 to 30000	1 min^{-1}/ s	0	Immediately	Tuning	–	
Pn10F	2	Mode Switch (position error)	0 to 10000	1 reference unit	0	Immediately	Tuning	–	
Pn11F	2	Position Integral Time Constant	0 to 50000	0.1 ms	0	Immediately	Tuning	–	5.9.4
Pn121	2	Friction Compensation Gain	10 to 1000	1%	100	Immediately	Tuning	–	5.8.2
Pn122	2	2nd Gain for Friction Compensation	10 to 1000	1%	100	Immediately	Tuning	–	
Pn123	2	Friction Compensation Coefficient	0 to 100	1%	0	Immediately	Tuning	–	
Pn124	2	Friction Compensation Frequency Correction	-10000 to 10000	0.1 Hz	0	Immediately	Tuning	–	
Pn125	2	Friction Compensation Gain Correction	1 to 1000	1%	100	Immediately	Tuning	–	
Pn131	2	Gain Switching Time 1	0 to 65535	1 ms	0	Immediately	Tuning	–	5.8.1
Pn132	2	Gain Switching Time 2	0 to 65535	1 ms	0	Immediately	Tuning	–	
Pn135	2	Gain Switching Waiting Time 1	0 to 65535	1 ms	0	Immediately	Tuning	–	
Pn136	2	Gain Switching Waiting Time 2	0 to 65535	1 ms	0	Immediately	Tuning	–	

(cont'd)

Parameter No.	Size	Name	Setting Range	Units	Factory Setting	When Enabled	Classi-fication	Profile	Reference Section
Pn139	2	Automatic Gain Changeover Related Switch 1	0000 to 0052	–	0000	Immediately	Tuning	–	5.8.1
Pn13D	2	Current Gain Level	100 to 2000	1%	2000	Immediately	Tuning	–	5.8.4
Pn140	2	Model Following Control Related Switch	0000 to 1121	–	0100	Immediately	Tuning	–	–
Pn141	2	Model Following Control Gain	10 to 20000	0.1/s	500	Immediately	Tuning	–	–
Pn142	2	Model Following Control Gain Compensation	500 to 2000	0.1%	1000	Immediately	Tuning	–	–

Pn139

n. □ □ □ □ (4th digit, 3rd digit, 2nd digit, 1st digit)

Gain Switching Selection Switch

0	Manual gain switching Changes gain manually using G-SEL of the servo command output signals (SVCMD_IO).
1	Reserved (Do not change.)
2	Automatic gain switching pattern 1 Changes automatically 1st gain to 2nd gain when the switching condition A is satisfied. Changes automatically 2nd gain to 1st gain when the switching condition A is not satisfied.

Gain Switching Condition A

0	Positioning completion signal (/COIN) ON
1	Positioning completion signal (/COIN) OFF
2	Positioning near signal (/NEAR) ON
3	Positioning near signal (/NEAR) OFF
4	Position reference filter output = 0 and position reference input OFF
5	Position reference input ON

Reserved (Do not change.)

Reserved (Do not change.)

Pn140

n. □ □ □ □ (4th digit, 3rd digit, 2nd digit, 1st digit)

Model Following Control Selection

0	Does not use model following control.
1	Uses model following control.

Vibration Suppression Selection

0	Does not perform vibration suppression.
1	Performs vibration suppression over the specified frequency.
2	Performs vibration suppression over two different kinds of frequencies.

Vibration Suppression Adjustment Selection		Reference Section
0	Does not adjust vibration suppression automatically using utility function.	5.3.1, 5.4.1, 5.5.1, 5.7.1
1	Adjusts vibration suppression automatically using utility function.	

Selection of Speed Feedforward (VFF) / Torque Feedforward (TFF)		Reference Section
0	Does not use model following control and speed/torque feedforward together.	5.3.1, 5.4.1
1	Uses model following control and speed/torque feedforward together.	

(cont'd)

Parameter No.	Size	Name	Setting Range	Units	Factory Setting	When Enabled	Classi-fication	Profile	Reference Section
Pn143	2	Model Following Control Bias (Forward Direction)	0 to 10000	0.1%	1000	Immediately	Tuning	–	–
Pn144	2	Model Following Control Bias (Reverse Direction)	0 to 10000	0.1%	1000	Immediately	Tuning	–	–
Pn145	2	Vibration Suppression 1 Frequency A	10 to 2500	0.1 Hz	500	Immediately	Tuning	–	–
Pn146	2	Vibration Suppression 1 Frequency B	10 to 2500	0.1 Hz	700	Immediately	Tuning	–	–
Pn147	2	Model Following Control Speed Feedforward Compensation	0 to 10000	0.1%	1000	Immediately	Tuning	–	–
Pn148	2	2nd Model Following Control Gain	10 to 20000	0.1/s	500	Immediately	Tuning	–	–
Pn149	2	2nd Model Following Control Gain Compensation	500 to 2000	0.1%	1000	Immediately	Tuning	–	–
Pn14A	2	Vibration Suppression 2 Frequency	10 to 2000	0.1 Hz	800	Immediately	Tuning	–	–
Pn14B	2	Vibration Suppression 2 Compensation	10 to 1000	1%	100	Immediately	Tuning	–	–
Pn14F	2	Control Related Switch	0000 to 0011	—	0011	After restart	Tuning	–	–

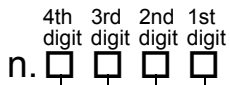

Model Following Control Type Selection		Reference Section
0	Model Following Control 1	5.3.1, 5.4.1, 5.5.1
1	Model Following Control 2	

Tuning-less Type Selection		Reference Section
0	Tuning-less type 1	5.2.2
1	Tuning-less type 2	

Reserved (Do not change.)

Reserved (Do not change.)

(cont'd)

Parameter No.	Size	Name	Setting Range	Units	Factory Setting	When Enabled	Classi-fication	Profile	Reference Section
Pn160	2	Anti-Resonance Control Related Switch	0000 to 0011	–	0010	Immediately	Tuning	–	5.3.1, 5.4.1, 5.5.1, 5.7.1

n. □ □ □ □ (4th digit, 3rd digit, 2nd digit, 1st digit)

Anti-Resonance Control Selection	
0	Does not use anti-resonance control.
1	Uses anti-resonance control.

Anti-Resonance Control Adjustment Selection	
0	Does not adjust anti-resonance control automatically using utility function.
1	Adjusts anti-resonance control automatically using utility function.

Reserved (Do not change.)

Reserved (Do not change.)

Pn161	2	Anti-Resonance Frequency	10 to 20000	0.1 Hz	1000	Immediately	Tuning	–	–
Pn162	2	Anti-Resonance Gain Compensation	1 to 1000	1%	100	Immediately	Tuning	–	–
Pn163	2	Anti-Resonance Damping Gain	0 to 300	1%	0	Immediately	Tuning	–	–
Pn164	2	Anti-Resonance Filter Time Constant 1 Compensation	-1000 to 1000	0.01 ms	0	Immediately	Tuning	–	–
Pn165	2	Anti-Resonance Filter Time Constant 2 Compensation	-1000 to 1000	0.01 ms	0	Immediately	Tuning	–	–
Pn170	2	Tuning-less Function Related Switch	0000 to 2411	–	1401	–	–	–	–

n. □ □ □ □ (4th digit, 3rd digit, 2nd digit, 1st digit)

Tuning-less Function Selection		When Enabled	Classification	Reference Section
0	Disables tuning-less function.	After restart	Setup	5.2
1	Enables tuning-less function.			

Control Method during Speed Control		When Enabled	Classification	Reference Section
0	Uses as speed control.	After restart	Setup	5.2
1	Uses as speed control and uses the host controller for position control.			

Rigidity Level		When Enabled	Classification	Reference Section
0 to 4	Sets rigidity level.	Immediately	Setup	5.2

Load Level		When Enabled	Classification	Reference Section
0 to 2	Sets load level.	Immediately	Setup	5.2

Pn205	2	Multiturn Limit Setting	0 to 65535	1 rev	65535	After restart	Setup	–	4.7.6

(cont'd)

Parameter No.	Size	Name	Setting Range	Units	Factory Setting	When Enabled	Classification	Profile	Reference Section
Pn207	2	Position Control Function Switch	0000 to 2210	–	0010	After restart	Setup	–	–

n. □ □ □ □ (4th digit, 3rd digit, 2nd digit, 1st digit)

- 1st digit: Reserved (Do not change.)
- 2nd digit: Reserved (Do not change.)
- 3rd digit: Reserved (Do not change.)
- 4th digit: /COIN Output Timing

/COIN Output Timing		Reference Section
0	Outputs when the position error absolute value is the same or less than the positioning completed width (Pn522).	4.8.6
1	Outputs when the position error absolute value is the same or less than the positioning completed width (Pn522), and the reference after position reference filtering is 0.	
2	Outputs when the position error absolute value is the same or less than the positioning completed width (Pn522), and the position reference input is 0.	

Pn20A	4	Number of External Scale Pitch	4 to 1048576	1 pitch/rev	32768	After restart	Setup	–	8.3
Pn20E	4	Electronic Gear Ratio (Numerator)	1 to 1073741824	1	1	After restart	Setup	–	4.4.3
Pn210	4	Electronic Gear Ratio (Denominator)	1 to 1073741824	1	1	After restart	Setup	–	
Pn212	4	Encoder Output Pulses	16 to 1073741824	1 P/rev	2048	After restart	Setup	–	4.4.5
Pn22A	2	Fully-closed Control Selection Switch	0000 to 1003	–	0000	After restart	Setup	–	–

n. □ □ □ □ (4th digit, 3rd digit, 2nd digit, 1st digit)

- 1st digit: Reserved (Do not change.)
- 2nd digit: Reserved (Do not change.)
- 3rd digit: Reserved (Do not change.)
- 4th digit: Speed Feedback Selection at Fully-closed Control

Speed Feedback Selection at Fully-closed Control		Reference Section
0	Uses motor encoder speed.	8.3.8
1	Uses external encoder speed.	

(cont'd)

Parameter No.	Size	Name	Setting Range	Units	Factory Setting	When Enabled	Classi-fication	Profile	Reference Section
Pn230	2	Position Control Expanded Function Switch	0000 to 0001	–	0000	After reset	Setup	–	5.8.6
Pn231	4	Backlash Compensation Value	-500000 to 500000	0.1 reference unit	0	Immediately	Setup	–	5.8.6
Pn233	2	Backlash Compensation Time Constant	0 to 65536	0.01 ms	0	Immediately	Setup	–	5.8.6
Pn281	2	Encoder Output Resolution	1 to 4096	1 edge/ pitch	20	After restart	Setup	–	8.3.3
Pn304	2	JOG Speed	0 to 10000	1 min^{-1}	500	Immediately	Setup	–	6.3
Pn305	2	Soft Start Acceleration Time	0 to 10000	1 ms	0	Immediately	Setup	–	–
Pn306	2	Soft Start Deceleration Time	0 to 10000	1 ms	0	Immediately	Setup	–	
Pn310	2	Vibration Detection Switch	0000 to 0002	–	0000	Immediately	Setup	–	–
Pn311	2	Vibration Detection Sensibility	50 to 500	1%	100	Immediately	Tuning	–	6.16
Pn312	2	Vibration Detection Level	0 to 5000	1 min^{-1}	50	Immediately	Tuning	–	
Pn324	2	Moment of Inertia Calculating Start Level	0 to 20000	1%	300	Immediately	Setup	–	5.3.2
Pn401	2	Torque Reference Filter Time Constant	0 to 65535	0.01 ms	100	Immediately	Tun-ing	–	5.9.3

Pn230

n. □ □ □ □ (4th digit, 3rd digit, 2nd digit, 1st digit)

Backlash Compensation Direction	
0	Compensates with a reference in the forward direction.
1	Compensates with a reference in the reverse direction.

Reserved (Do not change.)

Reserved (Do not change.)

Reserved (Do not change.)

Pn310

n. □ □ □ □ (4th digit, 3rd digit, 2nd digit, 1st digit)

Vibration Detection Selection		Reference Section
0	Does not detect vibration.	6.16
1	Outputs warning (A.911) when vibration is detected.	
2	Outputs alarm (A.520) when vibration is detected.	

Reserved (Do not change.)

Reserved (Do not change.)

Reserved (Do not change.)

(cont'd)

Parameter No.	Size	Name	Setting Range	Units	Factory Setting	When Enabled	Classi-fication	Profile	Reference Section
Pn402	2	Forward Torque Limit	0 to 800	1%	800	Immediately	Setup	–	4.6.1
Pn403	2	Reverse Torque Limit	0 to 800	1%	800	Immediately	Setup	–	
Pn404	2	Forward External Torque Limit	0 to 800	1%	100	Immediately	Setup	–	4.6.2
Pn405	2	Reverse External Torque Limit	0 to 800	1%	100	Immediately	Setup	–	
Pn406	2	Emergency Stop Torque	0 to 800	1%	800	Immediately	Setup	–	4.3.2
Pn407	2	Speed Limit during Torque Control	0 to 10000	1 min^{-1}	10000	Immediately	Setup	–	4.8.8
Pn408	2	Torque Related Function Switch	0000 to 1111	–	0000	–	–	–	–

n. □ □ □ □ (4th digit, 3rd digit, 2nd digit, 1st digit)

1st Step Notch Filter Selection		When Enabled	Classification	Reference Section
0	N/A	Immediately	Setup	5.9.3
1	Uses 1st step notch filter for torque reference.			

Speed Limit Selection		When Enabled	Classification	Reference Section
0	Uses the smaller of the maximum motor speed and the value of Pn407 as the speed limit value.	After restart	Setup	4.8.8
1	Uses the smaller of the overspeed detection speed and the value of Pn407 as the speed limit value.			

2nd Step Notch Filter Selection		When Enabled	Classification	Reference Section
0	N/A	Immediately	Setup	5.9.3
1	Uses 2nd step notch filter for torque reference.			

Friction Compensation Function Selection		When Enabled	Classification	Reference Section
0	Disables friction compensation function.	Immediately	Setup	5.8.2
1	Enables friction compensation function.			

Pn409	2	1st Notch Filter Frequency	50 to 5000	1 Hz	5000	Immediately	Tuning	–	5.9.3
Pn40A	2	1st Notch Filter Q Value	50 to 1000	0.01	70	Immediately	Tuning	–	
Pn40B	2	1st Notch Filter Depth	0 to 1000	0.001	0	Immediately	Tuning	–	
Pn40C	2	2nd Notch Filter Frequency	50 to 5000	1 Hz	5000	Immediately	Tuning	–	
Pn40D	2	2nd Notch Filter Q Value	50 to 1000	0.01	70	Immediately	Tuning	–	
Pn40E	2	2nd Notch Filter Depth	0 to 1000	0.001	0	Immediately	Tuning	–	
Pn40F	2	2nd Step 2nd Torque Reference Filter Frequency	100 to 5000	1 Hz	5000	Immediately	Tuning	–	
Pn410	2	2nd Step 2nd Torque Reference Filter Q Value	50 to 100	0.01	50	Immediately	Tuning	–	
Pn412	2	1st Step 2nd Torque Reference Filter Time Constant	0 to 65535	0.01 ms	100	Immediately	Tuning	–	5.8.1
Pn415	2	Reserved (Do not change.)	–	–	0	–	–	–	–
Pn423	2	Reserved (Do not change.)	–	–	0000	–	–	–	–

(cont'd)

Parameter No.	Size	Name	Setting Range	Units	Factory Setting	When Enabled	Classi-fication	Profile	Reference Section
Pn424	2	Torque Limit at Main Circuit Voltage Drop	0 to 100	1%	50	Immediately	Setup	–	4.3.7
Pn425	2	Release Time for Torque Limit at Main Circuit Voltage Drop	0 to 1000	1 ms	100	Immediately	Setup	–	
Pn456	2	Sweep Torque Reference Amplitude	1 to 800	1%	15	Immediately	Tuning	–	6.21
Pn460	2	Notch Filter Adjustment Switch	0000 to 0101	–	0101	Immediately	Tuning	–	5.2.1 5.3.1 5.5.1
Pn501	2	Zero Clamp Level	0 to 10000	1 min^{-1}	10	Immediately	Setup	–	–
Pn502	2	Rotation Detection Level	1 to 10000	1 min^{-1}	20	Immediately	Setup	–	4.8.3
Pn503	2	Speed Coincidence Signal Output Width	0 to 100	1 min^{-1}	10	Immediately	Setup	–	4.8.5
Pn506	2	Brake Reference - Servo OFF Delay Time	0 to 50	10 ms	0	Immediately	Setup	–	4.3.4
Pn507	2	Brake Reference Output Speed Level	0 to 10000	1 min^{-1}	100	Immediately	Setup	–	
Pn508	2	Waiting Time for Brake Signal When Motor Running	10 to 100	10 ms	50	Immediately	Setup	–	
Pn509	2	Instantaneous Power Cut Hold time	20 to 1000	1 ms	20	Immediately	Setup	–	4.3.6

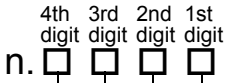

Notch Filter Adjustment Selection 1

0	Does not adjust 1st step notch filter automatically using utility function.
1	Adjust 1st step notch filter automatically using utility function.

Reserved (Do not change.)

Notch Filter Adjustment Selection 2

0	Does not adjust 2nd step notch filter automatically using utility function.
1	Adjust 2nd step notch filter automatically using utility function.

Reserved (Do not change.)

(cont'd)

Parameter No.	Size	Name	Setting Range	Units	Factory Setting	When Enabled	Classi-fication	Profile	Reference Section
Pn50A	2	Input Signal Selection 1	0000 to FFF1	–	1881	After restart	Setup	–	–

n. □ □ □ □ (4th digit, 3rd digit, 2nd digit, 1st digit)

1st digit	Reserved (Do not change.)
2nd digit	Reserved (Do not change.)
3rd digit	Reserved (Do not change.)

4th digit: P-OT Signal Mapping (Forward run prohibited when OFF (open))		Reference Section
0	Forward run allowed when CN1-13 input signal is ON (closed).	4.3.2
1	Forward run allowed when CN1-7 input signal is ON (closed).	
2	Forward run allowed when CN1-8 input signal is ON (closed).	
3	Forward run allowed when CN1-9 input signal is ON (closed).	
4	Forward run allowed when CN1-10 input signal is ON (closed).	
5	Forward run allowed when CN1-11 input signal is ON (closed).	
6	Forward run allowed when CN1-12 input signal is ON (closed).	
7	Forward run prohibited.	
8	Forward run allowed.	
9	Forward run allowed when CN1-13 input signal is OFF (open).	
A	Forward run allowed when CN1-7 input signal is OFF (open).	
B	Forward run allowed when CN1-8 input signal is OFF (open).	
C	Forward run allowed when CN1-9 input signal is OFF (open).	
D	Forward run allowed when CN1-10 input signal is OFF (open).	
E	Forward run allowed when CN1-11 input signal is OFF (open).	
F	Forward run allowed when CN1-12 input signal is OFF (open).	

(cont'd)

Parameter No.	Size	Name	Setting Range	Units	Factory Setting	When Enabled	Classi-fication	Profile	Reference Section
Pn50B	2	Input Signal Selection 2	0000 to FFFF	–	8882	After restart	Setup	–	–

4th digit 3rd digit 2nd digit 1st digit

n. □ □ □ □

N-OT Signal Mapping (Reverse run prohibited when OFF (open))		Reference Section
0	Reverse run allowed when CN1-13 input signal is ON (closed).	4.3.2
1	Reverse run allowed when CN1-7 input signal is ON (closed).	
2	Reverse run allowed when CN1-8 input signal is ON (closed).	
3	Reverse run allowed when CN1-9 input signal is ON (closed) .	
4	Reverse run allowed when CN1-10 input signal is ON (closed).	
5	Reverse run allowed when CN1-11 input signal is ON (closed).	
6	Reverse run allowed when CN1-12 input signal is ON (closed).	
7	Reverse run prohibited.	
8	Reverse run allowed.	
9	Reverse run allowed when CN1-13 input signal is OFF (open).	
A	Reverse run allowed when CN1-7 input signal is OFF (open).	
B	Reverse run allowed when CN1-8 input signal is OFF (open).	
C	Reverse run allowed when CN1-9 input signal is OFF (open).	
D	Reverse run allowed when CN1-10 input signal is OFF (open).	
E	Reverse run allowed when CN1-11 input signal is OFF (open).	
F	Reverse run allowed when CN1-12 input signal is OFF (open).	

Reserved (Do not change.)

/P-CL Signal Mapping (Torque Limit when ON (closed))		Reference Section
0	Active when CN1-13 input signal is ON (closed).	4.6.2
1	Active when CN1-7 input signal is ON (closed).	
2	Active when CN1-8 input signal is ON (closed).	
3	Active when CN1-9 input signal is ON (closed).	
4	Active when CN1-10 input signal is ON (closed).	
5	Active when CN1-11 input signal is ON (closed).	
6	Active when CN1-12 input signal is ON (closed).	
7	Always active (fixed).	
8	Not active (fixed).	
9	Active when CN1-13 input signal is OFF (open).	
A	Active when CN1-7 input signal is OFF (open).	
B	Active when CN1-8 input signal is OFF (open).	
C	Active when CN1-9 input signal is OFF (open).	
D	Active when CN1-10 input signal is OFF (open).	
E	Active when CN1-11 input signal is OFF (open).	
F	Active when CN1-12 input signal is OFF (open).	

/N-CL Signal Mapping (Torque Limit when ON (closed))		Reference Section
0 to F	Same as /P-CL signal mapping	4.6.2

(cont'd)

Parameter No.	Size	Name	Setting Range	Units	Factory Setting	When Enabled	Classification	Profile	Reference Section
Pn50E	2	Output Signal Selection 1	0000 to 3333	–	0000	After restart	Setup	–	–

n. □ □ □ □ (4th digit, 3rd digit, 2nd digit, 1st digit)

Positioning Completion Signal Mapping (/COIN)		Reference Section
0	Disabled (the above signal is not used.)	4.8.6
1	Outputs the signal from CN1-1, 2 output terminal.	
2	Outputs the signal from CN1-23, 24 output terminal.	
3	Outputs the signal from CN1-25, 26 output terminal.	

Speed Coincidence Detection Signal Mapping (/V-CMP)		Reference Section
0 to 3	Same as /COIN Signal Mapping.	4.8.5

Servomotor Rotation Detection Signal Mapping (/TGON)		Reference Section
0 to 3	Same as /COIN Signal Mapping.	4.8.3

Servo Ready Signal Mapping (/S-RDY)		Reference Section
0 to 3	Same as /COIN Signal Mapping.	4.8.4

Parameter No.	Size	Name	Setting Range	Units	Factory Setting	When Enabled	Classification	Profile	Reference Section
Pn50F	2	Output Signal Selection 2	0000 to 3333	–	0100	After restart	Setup	–	–

n. □ □ □ □ (4th digit, 3rd digit, 2nd digit, 1st digit)

Torque Limit Detection Signal Mapping (/CLT)		Reference Section
0	Disabled (the above signal is not used.)	4.6.3
1	Outputs the signal from CN1-1, 2 output terminal.	
2	Outputs the signal from CN1-23, 24 output terminal.	
3	Outputs the signal from CN1-25, 26 output terminal.	

Speed Limit Detection Signal Mapping (/VLT)		Reference Section
0 to 3	Same as /CLT Signal Mapping.	4.8.8

Brake Signal Mapping (/BK)		Reference Section
0 to 3	Same as /CLT Signal Mapping.	4.3.4

Warning Signal Mapping (/WARN)		Reference Section
0 to 3	Same as /CLT Signal Mapping.	4.8.2

(cont'd)

Parameter No.	Size	Name	Setting Range	Units	Factory Setting	When Enabled	Classi-fication	Profile	Reference Section
Pn510	2	Output Signal Selection 3	0000 to 0333	–	0000	After restart	Setup	–	–

n. □ □ □ □ (4th digit, 3rd digit, 2nd digit, 1st digit)

Near Signal Mapping (/NEAR)		Reference Section
0	Disabled (the above signal is not used.)	4.8.7
1	Outputs the signal from CN1-1, 2 terminal.	
2	Outputs the signal from CN1-23, 24 terminal.	
3	Outputs the signal from CN1-25, 26 terminal.	

Reserved (Do not change.)

Reserved (Do not change.)

Reserved (Do not change.)

(cont'd)

Parameter No.	Size	Name	Setting Range	Units	Factory Setting	When Enabled	Classi-fication	Profile	Reference Section
Pn511	2	Input Signal Selection 5	0000 to FFFF	–	6543	After restart	Setup	–	3.3.1

n. □ □ □ □ (4th digit, 3rd digit, 2nd digit, 1st digit)

Homing Deceleration Switch Signal Mapping (/DEC)

0	Active when CN1-13 input signal is ON (closed).
1	Active when CN1-7 input signal is ON (closed).
2	Active when CN1-8 input signal is ON (closed).
3	Active when CN1-9 input signal is ON (closed).
4	Active when CN1-10 input signal is ON (closed).
5	Active when CN1-11 input signal is ON (closed).
6	Active when CN1-12 input signal is ON (closed).
7	Not active (fixed).
9	Active when CN1-13 input signal is OFF (open).
A	Active when CN1-7 input signal is OFF (open).
B	Active when CN1-8 input signal is OFF (open).
C	Active when CN1-9 input signal is OFF (open).
D	Active when CN1-10 input signal is OFF (open).
E	Active when CN1-11 input signal is OFF (open).
F	Active when CN1-12 input signal is OFF (open).

External Latch Signal Mapping (/EXT1)

4	Active when CN1-10 input signal is ON (closed).
5	Active when CN1-11 input signal is ON (closed).
6	Active when CN1-12 input signal is ON (closed).
7	Not active (fixed).
D	Active when CN1-10 signal is OFF (open).
E	Active when CN1-11 signal is OFF (open).
F	Active when CN1-12 signal is OFF (open).
0 to 3 9 to C	Not active (fixed).

External Latch 2 Signal Mapping (/EXT2)

0 to C	Same as /EXT1 signal mapping.

External Latch 3 Signal Mapping (/EXT3)

0 to C	Same as /EXT1 signal mapping.

(cont'd)

Parameter No.	Size	Name	Setting Range	Units	Factory Setting	When Enabled	Classi-fication	Profile	Reference Section
Pn512	2	Output Signal Inverse Setting	0000 to 0111	–	0000	After restart	Setup	–	3.3.2

n. □ □ □ □ (4th digit, 3rd digit, 2nd digit, 1st digit)

Output Signal Inversion for CN1-1 or -2 Terminal	
0	Does not inverse outputs.
1	Inverses outputs.

Output Signal Inversion for CN1-23 or -24 Terminal	
0	Does not inverse outputs.
1	Inverses outputs.

Output Signal Inversion for CN1-25 or -26 Terminal	
0	Does not inverse outputs.
1	Inverses outputs.

Reserved (Do not change.)

Pn517	2	Reserved (Do not change.)	–	–	0000	–	–	–	–
Pn51B	4	Excessive Error Level between Servomotor and Load Positions	0 to 1073741824	1 reference unit	1000	Immediately	Setup	–	8.3.6
Pn51E	2	Excessive Position Error Warning Level	10 to 100	1%	100	Immediately	Setup	–	9.2.1
Pn520	4	Excessive Position Error Alarm Level	1 to 1073741823	1 reference unit	5242880	Immediately	Setup	–	5.1.4 9.1.1
Pn522	4	Positioning Completed Width	0 to 1073741824	1 reference unit	7	Immediately	Setup	–	4.8.6
Pn524	4	NEAR Signal Width	1 to 1073741824	1 reference unit	1073741824	Immediately	Setup	–	4.8.7
Pn526	4	Excessive Position Error Alarm Level at Servo ON	1 to 1073741823	1 reference unit	5242880	Immediately	Setup	–	5.1.4
Pn528	2	Excessive Position Error Warning Level at Servo ON	10 to 100	1%	100	Immediately	Setup	–	
Pn529	2	Speed Limit Level at Servo ON	0 to 10000	1 min^{-1}	10000	Immediately	Setup	–	
Pn52A	2	Multiplier per One Fully-closed Rotation	0 to 100	1%	20	Immediately	Tuning	–	8.3.6
Pn52B	2	Overload Warning Level	1 to 100	1%	20	Immediately	Setup	–	4.3.8
Pn52C	2	Derating of Base Current at Detecting Overload of Motor	10 to 100	1%	100	After restart	Setup	–	
Pn52D	2	Reserved (Do not change.)	–	–	50	–	–	–	–
Pn52F	2	Reserved (Do not change.)	–	–	0FFF	–	–	–	–

(cont'd)

Parameter No.	Size	Name	Setting Range	Units	Factory Setting	When Enabled	Classi-fication	Profile	Reference Section
Pn530	2	Program JOG Operation Related Switch	0000 to 0005	–	0000	Immediately	Setup	–	6.5

n. □ □ □ □ (4th digit, 3rd digit, 2nd digit, 1st digit)

Program JOG Operation Switch

0	(Waiting time Pn535 → Forward movement Pn531) × Number of movements Pn536
1	(Waiting time Pn535 → Reverse movement Pn531) × Number of movements Pn536
2	(Waiting time Pn535 → Forward movement Pn531) × Number of movements Pn536 (Waiting time Pn535 → Reverse movement Pn531) × Number of movements Pn536
3	(Waiting time Pn535 → Reverse movement Pn531) × Number of movements Pn536 (Waiting time Pn535 → Forward movement Pn531) × Number of movements Pn536
4	(Waiting time Pn535 → Forward movement Pn531 → Waiting time Pn535 → Reverse movement Pn531) × Number of movements Pn536
5	(Waiting time Pn535 → Reverse movement Pn531 → Waiting time Pn535 → Forward movement Pn531) × Number of movements Pn536

Reserved (Do not change.)

Reserved (Do not change.)

Reserved (Do not change.)

Pn531	4	Program JOG Movement Distance	1 to 1073741824	1 reference unit	32768	Immediately	Setup	–	6.5
Pn533	2	Program JOG Movement Speed	1 to 10000	1 min^{-1}	500	Immediately	Setup	–	
Pn534	2	Program JOG Acceleration/ Deceleration Time	2 to 10000	1 ms	100	Immediately	Setup	–	
Pn535	2	Program JOG Waiting Time	0 to 10000	1 ms	100	Immediately	Setup	–	
Pn536	2	Number of Times of Program JOG Movement	0 to 1000	1 time	1	Immediately	Setup	–	
Pn550	2	Analog Monitor 1 Offset Voltage	-10000 to 10000	0.1 V	0	Immediately	Setup	–	5.1.3
Pn551	2	Analog Monitor 2 Offset Voltage	-10000 to 10000	0.1 V	0	Immediately	Setup	–	
Pn552	2	Analog Monitor Magnification (×1)	-10000 to 10000	×0.01	100	Immediately	Setup	–	
Pn553	2	Analog Monitor Magnification (×2)	-10000 to 10000	×0.01	100	Immediately	Setup	–	
Pn560	2	Remained Vibration Detection Width	1 to 3000	0.1%	400	Immediately	Setup	–	5.7.1
Pn561	2	Overshoot Detection Level	0 to 100	1%	100	Immediately	Setup	–	5.3.1 5.4.1
Pn600	2	Regenerative Resistor Capacity *2	Depends on SERVO-PACK Capacity *3	10 W	0	Immediately	Setup	–	3.7.2
Pn601	2	Reserved (Do not change.)	–	–	0	–	–	–	–

*2. Normally set to "0." When using an external regenerative resistor, set the capacity (W) of the regenerative resistor.
*3. The upper limit is the maximum output capacity (W) of the SERVOPACK.

(cont'd)

Parameter No.	Size	Name	Setting Range	Units	Factory Setting	When Enabled	Classi-fication	Profile	Reference Section
Pn621 to Pn628[*11]	–	SERVOPACK: Safety Module Parameters	–	–	–	–	–	–	–
Pn800	2	Communications Control	–	–	1040	Immediately	Setup	–	–

n. □ □ □ □ (4th digit, 3rd digit, 2nd digit, 1st digit)

MECHATROLINK-III Communications Check Mask (for debug)

0	No mask
1	Ignores MECHATROLINK communications error (A.E6□).
2	Ignores WDT error (A.E5□).
3	Ignores both MECHATROLINK communications error (A.E6□) and WDT error (A.E5□).

Warning Check Mask

0	No mask
1	Ignores data setting warning (A.94□).
2	Ignores command warning (A.95□).
3	Ignores both data setting warning (A.94□) and command warning (A.95□).
4	Ignores communications warning (A.96□).
5	Ignores both data setting warning (A.94□) and communications warning (A.96□).
6	Ignores both command warning (A.95□) and communications warning (A.96□).
7	Ignores data setting warning (A.94□), command warning (A.95□) and communications warning (A.96□).
8	Ignores command warning 7 (A.97A) and data clamp (A.97B).
9	Ignores data setting warning (A.94□), command warning 7 (A.97A) and data clamp (A.97B).
A	Ignores command warning (A.95□) and command warning 7 (A.97A) and data clamp (A.97B).
B	Ignores data setting warning (A.94□), command warning (A.95□), command warning 7 (A.97A) and data clamp (A.97B).
C	Ignores communications warning (A.96□), command warning 7 (A.97A) and data clamp (A.97B).
D	Ignores data setting warning (A.94□), communications warning (A.96□), command warning 7 (A.97A) and data clamp (A.97B).
E	Ignores command warning (A.95□), communications warning (A.96□), command warning 7 (A.97A) and data clamp (A.97B).
F	Ignores data setting warning (A.94□), command warning (A.95□), communications warning (A.96□), command warning 7 (A.97A) and data clamp (A.97B).

Reserved (Do not change.)

Automatic warning-clear (for debug)[*9]

0	No warning-clear (for debug)
1	Automatic warning-clear (for MECHATROLINK-III specifications)

*9. This parameter is enabled only for MECHATROLINK-III standard servo profile.
*11. These parameters can be set in SERVOPACKs with safety modules. For details, refer to *Σ-V Series User's Manual, Safety Module* (No.: SIEP C720829 06).

(cont'd)

Parameter No.	Size	Name	Setting Range	Units	Factory Setting	When Enabled	Classi-fication	Profile	Reference Section
Pn801	2	Application Function Select 6 (Software LS)	–	–	0003	Immediately	Setup	–	4.3.3
Pn803	2	Origin Range	0 to 250	1 reference unit	10	Immediately	Setup	–	*1
Pn804	4	Forward Software Limit	-1073741823 to 1073741823	1 reference unit	1073741823	Immediately	Setup	–	4.3.3
Pn806	4	Reverse Software Limit	-1073741823 to 1073741823	1 reference unit	-1073741823	Immediately	Setup	–	
Pn808	4	Absolute Encoder Origin Offset	-1073741823 to 1073741823	1 reference unit	0	Immediately*4	Setup	–	4.7.8
Pn80A	2	1st Linear Acceleration Constant	1 to 65535	10000 reference unit/s^2	100	Immediately*5	Setup	–	*1
Pn80B	2	2nd Linear Acceleration Constant	1 to 65535	10000 reference unit/s^2	100	Immediately*5	Setup	–	*1
Pn80C	2	Acceleration Constant Switching Speed	0 to 65535	100 reference unit/s	0	Immediately*5	Setup	–	*1
Pn80D	2	1st Linear Deceleration Constant	1 to 65535	10000 reference unit/s^2	100	Immediately*5	Setup	–	*1

n. □ □ □ □ (4th digit, 3rd digit, 2nd digit, 1st digit)

Software Limit Function

0	Enables forward and reverse software limit.
1	Disables forward software limit.
2	Disables reverse software limit.
3	Disables software limit in both directions.

Reserved (Do not change.)

Software Limit for Reference

0	Disables software limit for reference.
1	Enables software limit for reference.

Reserved (Do not change.)

*1. For details, refer to *Σ-V Series User's Manual MECHATROLINK-III Standard Servo Profile Commands* (No.: SIEP S800000 63).
*4. Available after the SENS_ON command is input.
*5. Change the setting when the reference is stopped (DEN is set to 1), because the change will affect the output during operation.

(cont'd)

Parameter No.	Size	Name	Setting Range	Units	Factory Setting	When Enabled	Classi-fication	Profile	Reference Section
Pn80E	2	2nd Linear Deceleration Constant	1 to 65535	10000 reference unit/s^2	100	Immediately*5	Setup	–	*1
Pn80F	2	Deceleration Constant Switching Speed	0 to 65535	100 reference unit/s	0	Immediately*5	Setup	–	*1
Pn810	2	Exponential Function Acceleration/Deceleration Bias	0 to 65535	100 reference unit/s	0	Immediately*6	Setup	–	*1
Pn811	2	Exponential Function Acceleration/Deceleration Time Constant	0 to 5100	0.1 ms	0	Immediately*6	Setup	–	*1
Pn812	2	Movement Average Time	0 to 5100	0.1 ms	0	Immediately*6	Setup	–	*1
Pn814	4	Final Travel Distance for External Positioning	-1073741823 to 1073741823	1 reference unit	100	Immediately	Setup	–	*1
Pn816	2	Homing Mode Setting	–	–	0000	Immediately	Setup	M2*10	–

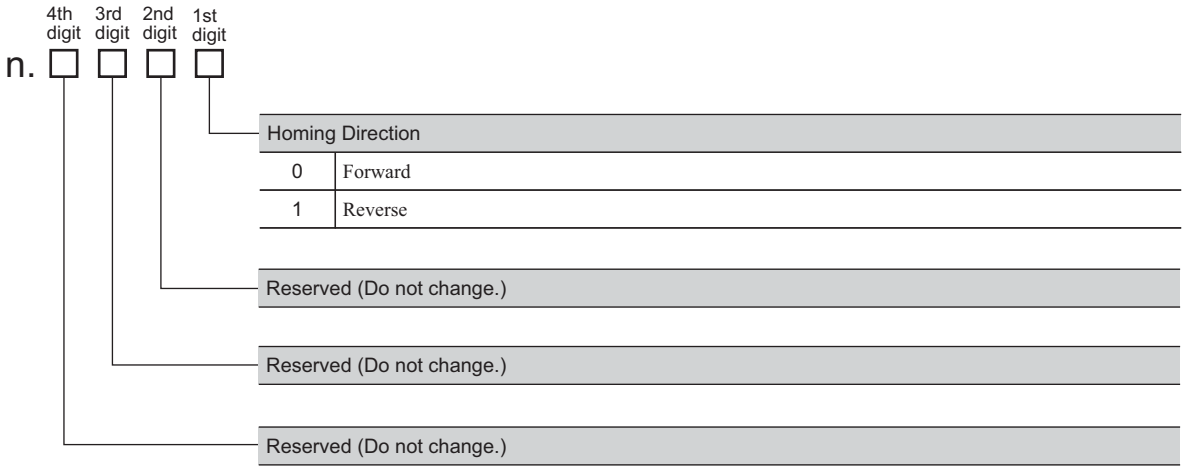

Parameter No.	Size	Name	Setting Range	Units	Factory Setting	When Enabled	Classi-fication	Profile	Reference Section
Pn817*7	2	Homing Approach Speed (Homing Approach Speed 1)	0 to 65535	100 reference unit/s	50	Immediately*5	Setup	–	*1
Pn818*8	2	Homing Creep Speed(Homing Approach Speed 2)	0 to 65535	100 reference unit/s	5	Immediately*5	Setup	–	*1
Pn819	4	Final Travel Distance for Homing	-1073741823 to 1073741823	1 reference unit	100	Immediately	Setup	–	*1

*1. For details, refer to *Σ-V Series User's Manual MECHATROLINK-III Standard Servo Profile Commands* (No.: SIEP S800000 63).
*5. Change the setting when the reference is stopped (DEN is set to 1), because the change will affect the output during operation.
*6. The settings are updated only if the sending of the reference has been stopped (DEN is set to 1).
*7. The set value of Pn842 is valid when the set value of Pn817 is 0. Software version 0023 or higher is required to use Pn842.
*8. The set value of Pn844 is valid when the set value of Pn818 is 0. Software version 0023 or higher is required to use Pn844.
*10. This parameter is enabled only for MECHATROLINK-II-compatible profile.

(cont'd)

Parameter No.	Size	Name	Setting Range	Units	Factory Setting	When Enabled	Classi-fication	Profile	Reference Section
Pn81E	2	Input Signal Monitor Selection	–	–	0000	Immediately	Setup	M2*10	–

n. □ □ □ □ (4th digit, 3rd digit, 2nd digit, 1st digit)

IO12 Signal Mapping

0	No mapping
1	Monitors CN1-13 input terminal.
2	Monitors CN1-7 input terminal.
3	Monitors CN1-8 input terminal.
4	Monitors CN1-9 input terminal.
5	Monitors CN1-10 input terminal.
6	Monitors CN1-11 input terminal.
7	Monitors CN1-12 input terminal.

IO13 Signal Mapping

0 to 7	Same as IO2 signal mapping.

IO14 Signal Mapping

0 to 7	Same as IO2 signal mapping.

IO15 Signal Mapping

0 to 7	Same as IO2 signal mapping.

Pn81F	2	Command Data Allocation	–	–	0010	After restart	Setup	M2*10	*1

n. □ □ □ □ (4th digit, 3rd digit, 2nd digit, 1st digit)

Option Field Allocation

0	Disables OPTION bit allocation.
1	Enables OPTION bit allocation.

Position Control Command TFF/TLIM Function Allocation

0	Disables allocation.
1	Enables allocation.

Reserved (Do not change.)

Reserved (Do not change.)

Pn820	4	Forward Latching Allowable Area	-2147483648 to 2147483647	1 reference unit	0	Immediately	Setup	–	*1
Pn822	4	Reverse Latching Allowable Area	-2147483648 to 2147483647	1 reference unit	0	Immediately	Setup	–	*1

*1. For details, refer to *Σ-V Series User's Manual MECHATROLINK-III Standard Servo Profile Commands* (No.: SIEP S800000 63).

*10. This parameter is enabled only for MECHATROLINK-II-compatible profile.

(cont'd)

Parameter No.	Size	Name		Setting Range	Units	Factory Setting	When Enabled	Classi-fication	Profile	Reference Section
Pn824	2	Option Monitor 1 Selection		–	–	0000	Immediately	Setup	–	*1
		0000H	Motor rotating speed [1000000H/overspeed detection position]							
		0001H	Speed reference [1000000H/overspeed detection position]							
		0002H	Torque [1000000H/max. torque]							
		0003H	Position error (lower 32 bits) [reference unit]							
		0004H	Position error (upper 32 bits) [reference unit]							
		0005H	System reserved							
		0006H	System reserved							
		000AH	Encoder count (lower 32 bits) [reference unit]							
		000BH	Encoder count (upper 32 bits) [reference unit]							
		000CH	FPG count (lower 32 bits) [reference unit]							
		000DH	FPG count (upper 32 bits) [reference unit]							
		0010H	Un000: Motor rotating speed [min^{-1}]							
		0011H	Un001: Speed reference [min^{-1}]							
		0012H	Un002: Torque reference [%]							
		0013H	Un003: Rotational angle 1 (encoder pulses from the phase-C origin: decimal display)							
		0014H	Un004: Rotational angle 2 [deg]							
		0015H	Un005: Input signal monitor							
		0016H	Un006: Output signal monitor							
		0017H	Un007: Input position reference speed [min^{-1}]							
		0018H	Un008: Position error [reference unit]							
		0019H	Un009: Accumulated load ratio [%]							
		001AH	Un00A: Regenerative load ratio [%]							
		001BH	Un00B: DB resistance consumption power [%]							
		001CH	Un00C: Input reference counter [reference unit]							
		001DH	Un00D: Feedback pulse counter [encoder pulse]							
		001EH	Un00E: Fully-closed loop feedback pulse counter [external encoder resolution]							
		001FH	System reserved							
		0023H	Primary multi-turn data [Rev]							
		0024H	Primary incremental data [pulse]							
		0027H	Un022: Installation environment monitor							
		0080H	Previous value of latched feedback position (LPOS) [encoder pulse]							
		0081H	Previous value of latched feedback position (LPOS2) [encoder pulse]						M3*9	
		0084H	Continuous latch status							
		Others	Reserved (Do not set.)							

*1. For details, refer to *Σ-V Series User's Manual MECHATROLINK-III Standard Servo Profile Commands* (No.: SIEP S800000 63).
*9. This parameter is enabled only for MECHATROLINK-III standard servo profile.

(cont'd)

Parameter No.	Size	Name	Setting Range	Units	Factory Setting	When Enabled	Classification	Profile	Reference Section
Pn825	2	Option Monitor 2 Selection	–	–	0000	Immediately	Setup	–	*1
		0000H to 0084H: Same as Option Monitor 1 Selection.							
Pn827	2	Linear Deceleration Constant 1 for Stopping	1 to 65535	10000 reference unit/s^2	100	Immediately*5	Setup	–	*1
Pn829	2	SVOFF Waiting Time (SVOFF at deceleration to stop)	0 to 65535	10 ms	0	Immediately*5	Setup	–	*1
Pn82A	2	Option Field Allocation 1	0000 to 1E1E	–	1813	After restart	Setup	M2*10	–

n. □ □ □ □ (4th digit, 3rd digit, 2nd digit, 1st digit)

0 to E	ACCFIL bit position
0	Disables ACCFIL bit allocation.
1	Enables ACCFIL bit allocation.
0 to E	GSEL bit position
0	Disables GSEL bit allocation.
1	Enables GSEL bit allocation.

Pn82B	2	Option Field Allocation 2	0000 to 1F1F	–	1D1C	After restart	Setup	M2*10	–

n. □ □ □ □ (4th digit, 3rd digit, 2nd digit, 1st digit)

0 to F	V_PPI bit position
0	Disables V_PPI bit allocation.
1	Enables V_PPI bit allocation.
0 to F	P_PI_CLR bit position
0	Disables P_PI_CLR bit allocation.
1	Enables P_PI_CLR bit allocation.

*1. For details, refer to *Σ-V Series User's Manual MECHATROLINK-III Standard Servo Profile Commands* (No.: SIEP S800000 63).
*5. Change the setting when the reference is stopped (DEN is set to 1), because the change will affect the output during operation.
*10. This parameter is enabled only for MECHATROLINK-II-compatible profile.

(cont'd)

Parameter No.	Size	Name	Setting Range	Units	Factory Setting	When Enabled	Classi-fication	Profile	Reference Section
Pn82C	2	Option Field Allocation 3	0000 to 1F1F	–	1F1E	After restart	Setup	M2*10	–

n. □ □ □ □ (4th digit, 3rd digit, 2nd digit, 1st digit)

0 to F	P_CL bit position
0	Disables P_CL bit allocation.
1	Enables P_CL bit allocation.
0 to F	N_CL bit position
0	Disables N_CL bit allocation.
1	Enables N_CL bit allocation.

Pn82D	2	Option Field Allocation 4	0000 to 1F1C	–	0000	After restart	Setup	M2*10	–

n. □ □ □ □ (4th digit, 3rd digit, 2nd digit, 1st digit)

0 to C	BANK_SEL1 bit position
0	Disables BANK_SEL1 bit allocation.
1	Enables BANK_SEL1 bit allocation.
0 to F	LT_DISABLE bit position
0	Disables LT_DISABLE bit allocation.
1	Enables LT_DISABLE bit allocation.

Pn82E	2	Option Field Allocation 5	0000 to 1D1F	–	0000	After restart	Setup	M2*10	–

n. □ □ □ □ (4th digit, 3rd digit, 2nd digit, 1st digit)

Reserved (Do not change.)	
Reserved (Do not change.)	
0 to D	OUT_SIGNAL bit position
0	Disables OUT_SIGNAL bit allocation.
1	Enables OUT_SIGNAL bit allocation.

*10. This parameter is enabled only for MECHATROLINK-II-compatible profile.

(cont'd)

Parameter No.	Size	Name	Setting Range	Units	Factory Setting	When Enabled	Classification	Profile	Reference Section
Pn833	2	Motion Setting	0000 to 0001	–	0000	After restart	Setup	–	*1
Pn834	4	1st Linear Acceleration Constant 2	1 to 20971520	10000 reference unit/s^2	100	Immediately *5	Setup	–	*1
Pn836	4	2nd Linear Acceleration Constant 2	1 to 20971520	10000 reference unit/s	100	Immediately *5	Setup	–	*1
Pn838	4	Acceleration Constant Switching Speed 2	0 to 2097152000	1 reference unit/s	0	Immediately *5	Setup	–	*1
Pn83A	4	1st Linear Deceleration Constant 2	1 to 20971520	10000 reference unit/s^2	100	Immediately *5	Setup	–	*1
Pn83C	4	2nd Linear Deceleration Constant 2	1 to 20971520	10000 reference unit/s^2	100	Immediately *5	Setup	–	*1
Pn83E	4	Deceleration Constant Switching Speed 2	0 to 2097152000	1 reference unit/s	0	Immediately *5	Setup	–	*1
Pn840	4	Linear Deceleration Constant 2 for Stopping	1 to 20971520	10000 reference unit/s^2	100	Immediately *5	Setup	–	*1
Pn842[*7]	4	Homing Approach Speed (Homing Approach Speed 12)	0 to 20971520	100 reference unit/s	0	Immediately *5	Setup	–	*1
Pn844[*8]	4	Homing Creep Speed (Homing Approach Speed 22)	0 to 20971520	100 reference unit/s	0	Immediately *5	Setup	–	*1
Pn850	2	Latch Sequence Number	0 to 8	–	0	Immediately	Setup	–	*1
Pn851	2	Continuous Latch Count	0 to 255	–	0	Immediately	Setup	–	*1

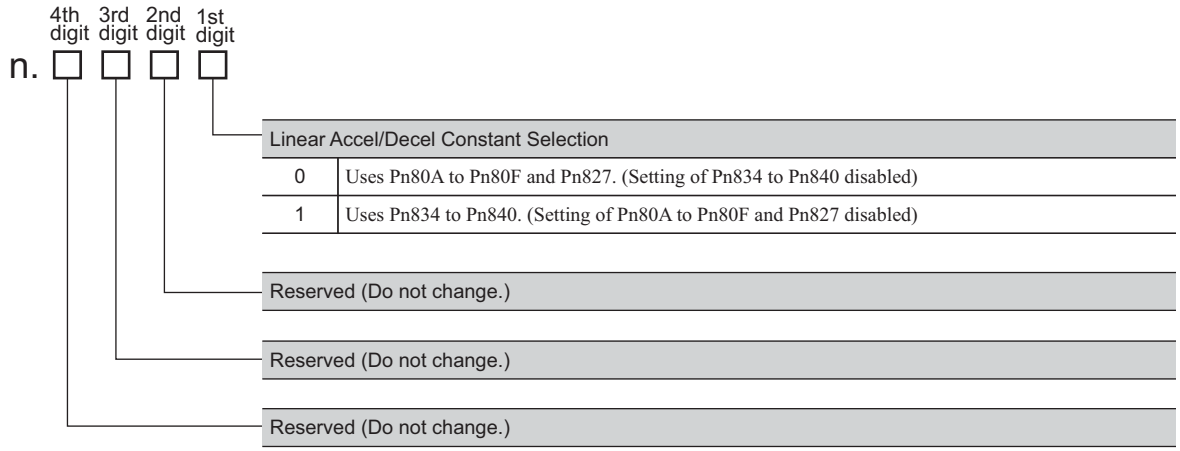

*1. For details, refer to *Σ-V Series User's Manual MECHATROLINK-III Standard Servo Profile Commands* (No.: SIEP S800000 63).

*5. Change the setting when the reference is stopped (DEN is set to 1), because the change will affect the output during operation.

*7. The set value of Pn842 is valid when the set value of Pn817 is 0. Software version 0023 or higher is required to use Pn842.

*8. The set value of Pn844 is valid when the set value of Pn818 is 0. Software version 0023 or higher is required to use Pn844.

(cont'd)

Parameter No.	Size	Name	Setting Range	Units	Factory Setting	When Enabled	Classi-fication	Profile	Reference Section
Pn852	2	Latch Sequence Signal 1 to 4 Setting	0000 to 3333	–	0000	Immediately	Setup	–	*1
Pn853	2	Latch Sequence Signal 5 to 8 Setting	0000 to 3333	–	0000	Immediately	Setup	–	*1

Pn852

n. □ □ □ □ (4th digit, 3rd digit, 2nd digit, 1st digit)

Latch sequence 1 signal selection.

0	Phase C
1	EXT1 signal
2	EXT2 signal
3	EXT3 signal

Latch sequence 2 signal selection.

0 to 3	Same as latch sequence 1 signal selection.

Latch sequence 3 signal selection.

0 to 3	Same as latch sequence 1 signal selection.

Latch sequence 4 signal selection.

0 to 3	Same as latch sequence 1 signal selection.

Pn853

n. □ □ □ □ (4th digit, 3rd digit, 2nd digit, 1st digit)

Latch sequence 5 signal selection

0	Phase C
1	EXT1 signal
2	EXT2 signal
3	EXT3 signal

Latch sequence 6 signal selection.

0 to 3	Same as latch sequence 5 signal selection.

Latch sequence 7 signal selection.

0 to 3	Same as latch sequence 5 signal selection.

Latch sequence 8 signal selection.

0 to 3	Same as latch sequence 5 signal selection.

*1. For details, refer to *Σ-V Series User's Manual MECHATROLINK-III Standard Servo Profile Commands* (No.: SIEP S800000 63).

(cont'd)

Parameter No.	Size	Name	Setting Range	Units	Factory Setting	When Enabled	Classi-fication	Profile	Reference Section
Pn860	2	SVCMD_IO (input signal monitor) Allocation 1	0000 to 1717	–	0000	Immediately	Setup	M3*9	–
Pn861	2	SVCMD_IO (input signal monitor) Allocation 2	0000 to 1717	–	0000	Immediately	Setup	M3*9	–
Pn862	2	SVCMD_IO (input signal monitor) Allocation 3	0000 to 1717	–	0000	Immediately	Setup	M3*9	–

Pn860

n. □ □ □ □ (4th digit, 3rd digit, 2nd digit, 1st digit)

0 to 7	Bit position of CN1-13 input terminal monitor
0	Disables bit allocation for CN1-13 input terminal monitor.
1	Enables bit allocation for CN1-13 input terminal monitor.
0 to 7	Bit position of CN1-7 input terminal monitor
0	Disables bit allocation for CN1-7 input terminal monitor.
1	Enables bit allocation for CN1-7 input terminal monitor.

Pn861

n. □ □ □ □ (4th digit, 3rd digit, 2nd digit, 1st digit)

0 to 7	Bit position of CN1-8 input terminal monitor
0	Disables bit allocation for CN1-8 input terminal monitor.
1	Enables bit allocation for CN1-8 input terminal monitor.
0 to 7	Bit position of CN1-9 input terminal monitor
0	Disables bit allocation for CN1-9 input terminal monitor.
1	Enables bit allocation for CN1-9 input terminal monitor.

Pn862

n. □ □ □ □ (4th digit, 3rd digit, 2nd digit, 1st digit)

0 to 7	Bit position of CN1-10 input terminal monitor
0	Disables bit allocation for CN1-10 input terminal monitor.
1	Enables bit allocation for CN1-10 input terminal monitor.
0 to 7	Bit position of CN1-11 input terminal monitor
0	Disables bit allocation for CN1-11 input terminal monitor.
1	Enables bit allocation for CN1-11 input terminal monitor.

*9. This parameter is enabled only for MECHATROLINK-III standard servo profile.

(cont'd)

Parameter No.	Size	Name	Setting Range	Units	Factory Setting	When Enabled	Classi-fication	Profile	Reference Section
Pn863	2	SVCMD_IO (input signal monitor) Allocation 4	0000 to 1717	–	0000	Immediately	Setup	M3*9	–
Pn864	2	SVCMD_IO (input signal monitor) Allocation 5	0000 to 1717	–	0000	Immediately	Setup	M3*9	–
Pn865	2	SVCMD_IO (input signal monitor) Allocation 6	0000 to 1717	–	0000	Immediately	Setup	M3*9	–
Pn866	2	SVCMD_IO (input signal monitor) Allocation 7	0000 to 1717	–	0000	Immediately	Setup	M3*9	–

Pn863:

n. □ □ □ □ (4th digit, 3rd digit, 2nd digit, 1st digit)

0 to 7	Bit position of CN1-12 input terminal monitor
0	Disables bit allocation for CN1-12 input terminal monitor.
1	Enables bit allocation for CN1-12 input terminal monitor.

Reserved (Do not change.)

Reserved (Do not change.)

Pn864:

n. □ □ □ □ (4th digit, 3rd digit, 2nd digit, 1st digit)

Reserved (Do not change.)

Reserved (Do not change.)

Reserved (Do not change.)

Reserved (Do not change.)

Pn865:

n. □ □ □ □ (4th digit, 3rd digit, 2nd digit, 1st digit)

Reserved (Do not change.)

Reserved (Do not change.)

Reserved (Do not change.)

Reserved (Do not change.)

Pn866:

n. □ □ □ □ (4th digit, 3rd digit, 2nd digit, 1st digit)

Reserved (Do not change.)

Reserved (Do not change.)

Reserved (Do not change.)

Reserved (Do not change.)

*9. This parameter is enabled only for MECHATROLINK-III standard servo profile.

(cont'd)

Parameter No.	Size	Name	Setting Range	Units	Factory Setting	When Enabled	Classi-fication	Profile	Reference Section
Pn868	2	SVCMD_IO (output signal monitor) Allocation 1	0000 to 1717	–	0000	Immediately	Setup	M3*9	–

n. □ □ □ □ (4th digit, 3rd digit, 2nd digit, 1st digit)

Allocation for CN1-1, -2 Output Signal Monitor (SVCMD-IO)

0	Sets CN1-1, -2 output terminal monitor to D24 (IO1_STS1).
1	Sets CN1-1, -2 output terminal monitor to D25 (IO2_STS1).
2	Sets CN1-1, -2 output terminal monitor to D26 (IO3_STS1).
3	Sets CN1-1, -2 output terminal monitor to D27 (IO4_STS1).
4	Sets CN1-1, -2 output terminal monitor to D28 (IO5_STS1).
5	Sets CN1-1, -2 output terminal monitor to D29 (IO6_STS1).
6	Sets CN1-1, -2 output terminal monitor to D30 (IO7_STS1).
7	Sets CN1-1, -2 output terminal monitor to D31 (IO8_STS1).

CN1-1, -2 Output Signal Monitor Selection

0	Disables bit allocation for CN1-1, -2 output terminal monitor.
1	Enables bit allocation for CN1-1, -2 output terminal monitor.

Allocation for CN1-23, -24 Output Signal Monitor (SVCMD_IO)

0 to 7	Same as the allocation for CN1-1, -2 output signal monitor.

CN1-23, -24 Output Signal Monitor Selection

0	Disables bit allocation for CN1-23, -24 output terminal monitor.
1	Enables bit allocation for CN1-23, -24 output terminal monitor.

Pn869	2	SVCMD_IO (output signal monitor) Allocation 2	0000 to 1717	–	0100	Immediately	Setup	M3*9	–

n. □ □ □ □ (4th digit, 3rd digit, 2nd digit, 1st digit)

Allocation for CN1-25, -26 Output Signal Monitor (SVCMD_IO)

0 to 7	Same as the allocation for CN1-1, -2 output signal monitor.

CN1-25, -26 Output Signal Monitor Selection

0	Disables bit allocation for CN1-25, -26 output terminal monitor.
1	Enables bit allocation for CN1-25, -26 output terminal monitor.

Reserved (Do not change.)

Reserved (Do not change.)

Pn880	2	Station Address Monitor (for maintenance, read only)	03 to EFH	–	0	Immediately	Setup	–	–
Pn881	2	Setting Transmission Byte Monitor [byte] (for maintenance, read only)	17, 32, 48	–	0	Immediately	Setup	–	–

*9. This parameter is enabled only for MECHATROLINK-III standard servo profile.

(cont'd)

Parameter No.	Size	Name	Setting Range	Units	Factory Setting	When Enabled	Classification	Profile	Reference Section
Pn882	2	Transmission Cycle Setting Monitor [0.25 µs] (for maintenance, read only)	0 to FFFFH	–	0	Immediately	Setup	–	–
Pn883	2	Communications Cycle Setting Monitor [x transmission cycle] (for maintenance, read only)	0 to 32	–	0	Immediately	Setup	–	–
Pn884	2	Communications Controls 2	0000 to 0001	–	0000	Immediately	Setup	M3*9	–
Pn88A	2	MECHATROLINK Receive Error Counter Monitor (for maintenance, read only)	0 to 65535	–	0	Immediately	Setup	–	–
Pn890 to Pn8A6	4	Command Data Monitor at Alarm/Warning Occurs (for maintenance, read only)	0 to FFFFFFFFH	–	0	Immediately	Setup	–	*1
Pn8A8 to Pn8BE	4	Response Data Monitor at Alarm/Warning Occurs (for maintenance, read only)	0 to FFFFFFFFH	–	0	Immediately	Setup	–	*1
Pn900	2	Parameter Bank Number	0 to 16	–	0	After restart	Setup	–	*1
Pn901	2	Parameter Bank Member Number	0 to 15	–	0	After restart	Setup	–	*1
Pn902 to Pn910	2	Parameter Bank Member Definition	0000H to 08FFH	–	0	After restart	Setup	–	*1
Pn920 to Pn95F	2	Parameter Bank Data (non-volatile memory save disabled)	0000H to FFFFH	–	0	Immediately	Setup	–	*1

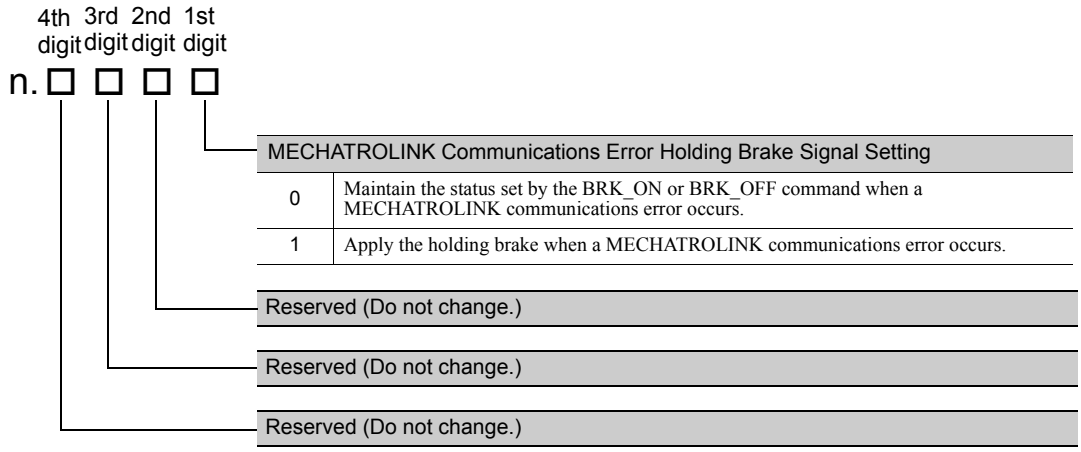

*1. For details, refer to *Σ-V Series User's Manual MECHATROLINK-III Standard Servo Profile Commands* (No.: SIEP S800000 63).

*9. This parameter is enabled only for MECHATROLINK-III standard servo profile.

10.1.3 MECHATROLINK-III Common Parameters

The following list shows the common parameters used by all devices for MECHATROLINK-III. These common parameters are used to make settings from the host controller via MECHATROLINK communications. Do not change settings with the digital operator or any other device.

Parameter No.	Size	Name		Setting Range	Units [Resolution]	Factory Setting	When Enabled	Classification
01 PnA02	4	Encoder Type (read only)		0 to 1	–	–	–	Device Information Related Parameters
		0000H	Absolute encoder					
		0001H	Incremental encoder					
02 PnA04	4	Motor Type (read only)		0 to 1	–	–	–	
		0000H	Rotational servomotor					
		0001H	Linear servomotor					
03 PnA06	4	Semi-closed/Fully-closed Type (read only)		0 to 1	–	–	–	
		0000H	Semi-closed					
		0001H	Fully-closed					
04 PnA08	4	Rated Speed (read only)		0 to FFFFFFFFH	min^{-1}	–	–	
05 PnA0A	4	Maximum Output Speed (read only)		0 to FFFFFFFFH	min^{-1}	–	–	
06 PnA0C	4	Speed Multiplier (read only)		-1073741823 to 1073741823	–	–	–	
07 PnA0E	4	Rated Torque (read only)		0 to FFFFFFFFH	N·m	–	–	
08 PnA10	4	Maximum Output Torque (read only)		0 to FFFFFFFFH	N·m	–	–	
09 PnA12	4	Torque Multiplier (read only)		-1073741823 to 1073741823	–	–	–	
0A PnA14	4	Resolution (read only)		0 to FFFFFFFFH	pulse/rev	–	–	
21 PnA42	4	Electronic Gear Ratio (Numerator)		1 to 1073741824	–	1	After restart	Machine Specification Related Parameters
22 PnA44	4	Electronic Gear Ratio (Denominator)		1 to 1073741824	–	1	After restart	
23 PnA46	4	Absolute Encoder Origin Offset		–1073741823 to 1073741823	1 reference unit	0	Immediately*1	
24 PnA48	4	Multiturn Limit Setting		0 to 65535	Rev	65535	After restart	
25 PnA4A	4	Limit Setting		0 to 33H	0000H	0000H	After restart	
		Bit 0	P-OT (0: Enabled, 1: Disabled)					
		Bit 1	N-OT (0: Enabled, 1: Disabled)					
		Bit 2	Reserved					
		Bit 3	Reserved					
		Bit 4	P-SOT (0: Disabled, 1: Enabled)					
		Bit 5	N-SOT (0: Disabled, 1: Enabled)					
		Bit 6	Reserved					
		Bit 7 to 31	Reserved					

*1. Available after the SENS_ON command is input.

Note: When using parameters that are enabled after restarting the SERVOPACK, a CONFIG command must be input or the power must be turned OFF and then ON again.

(cont'd)

Parameter No.	Size	Name	Setting Range	Units [Resolution]	Factory Setting	When Enabled	Classification
26 PnA4C	4	Forward Software Limit	–1073741823 to 1073741823	1 reference unit	1073741823	Immediately	Machine Specification Related Parameters
27 PnA4E	4	Reserved (Do not use.)	–	–	0	Immediately	
28 PnA50	4	Reverse Software Limit	–1073741823 to 1073741823	1 reference unit	–1073741823	Immediately	
29 PnA52	4	Reserved (Do not use.)	–	–	0	Immediately	
41 PnA82	4	Speed Unit*2	0 to 4	–	0	After restart	Unit System Related Parameters
		0000H reference unit/sec					
		0001H reference unit/min					
		0002H Percentage (%) of rated speed*3					
		0003H min^{-1}*3					
		0004H Max. motor speed/40000000H*4					
42 PnA84	4	Speed Base Unit (Set the value of "n" used as the exponent in 10^n when calculating the Speed Unit (41).)*3*4	–3 to 3	–	0	After restart	
43 PnA86	4	Position Unit	0	–	0	After restart	
		0000H reference unit					
44 PnA88	4	Position Base Unit (Set the value of "n" used as the exponent in 10^n when calculating the Position Unit (43).)	0	–	0	After restart	
45 PnA8A	4	Acceleration Unit	–	–	0	After restart	
		0000H reference unit/sec^2					
		0001H Not supported					
46 PnA8C	4	Acceleration Base Unit (Set the value of "n" used as the exponent in 10^n when calculating the Acceleration Unit (45).)	4 to 6	–	4	After restart	
47 PnA8E	4	Torque Unit	1 to 2	–	1	After restart	
		0000H Not supported					
		0001H Percentage (%) of rated torque					
		0002H Max. torque/40000000H*5					
48 PnA90	4	Torque Base Unit*5 (Set the value of "n" used as the exponent in 10^n when calculating the Torque Unit (47).)	–5 to 0	–	0	After restart	

*2. When using fully-closed loop control, set 0000H (Reference unit/sec).
*3. When either 0002H or 0003H is selected for the Speed Unit (parameter 41), set the Speed Base Unit (parameter 42) to a number between -3 and 0.
*4. When 0004H is selected for the Speed Unit (parameter 41), set the Speed Base Unit (parameter 42) to 0.
*5. When 0002H is selected for the Torque Unit (parameter 47), set the Torque Base Unit (parameter 48) to 0.
Note: When using parameters that are enabled after restarting the SERVOPACK, a CONFIG command must be input or the power must be turned OFF and then ON again.

(cont'd)

Parameter No.	Size	Name		Setting Range	Units [Resolution]	Factory Setting	When Enabled	Classification
49 PnA92	4	Compliance Unit System (read only)		–	–	0601011FH	–	Unit System Related Parameters
		Speed						
		Bit 0	reference unit/s (1: Enabled)					
		Bit 1	reference unit/min (1: Enabled)					
		Bit 2	Percentage (%) of rated speed (1: Enabled)					
		Bit 3	min^{-1} (rpm) (1: Enabled)					
		Bit 4	Max. motor speed/4000000H (1: Enabled)					
		Bit 5 to 7	Reserved (0: Disabled)					
		Position						
		Bit 8	reference unit (1: Enabled)					
		Bit 9 to 15	Reserved (0: Disabled)					
		Acceleration						
		Bit 16	reference unit/s^2 (1: Enabled)					
		Bit 17	msec (Acceleration time taken to reach the rated speed) (0: Disabled)					
		Bit 18 to 23	Reserved (0: Disabled)					
		Torque						
		Bit 24	N·m (N) (0: Disabled)					
		Bit 25	Percentage (%) of rated torque (1: Enabled)					
		Bit 26	Max. torque/40000000H (1: Enabled)					
		Bit 27 to 31	Reserved (0: Disabled)					
61 PnAC2	4	Speed Loop Gain		1000 to 2000000	0.001 Hz [0.1 Hz]	40000	Immediately	Adjustment Related Parameters
62 PnAC4	4	Speed Loop Integral Time Constant		150 to 512000	µs [0.01 ms]	20000	Immediately	
63 PnAC6	4	Position Loop Gain		1000 to 2000000	0.001/s [0.1/s]	40000	Immediately	
64 PnAC8	4	Feedforward Compensation		0 to 100	1%	0	Immediately	
65 PnACA	4	Position Loop Integral Time Constant		0 to 5000000	µs [0.1 ms]	0	Immediately	
66 PnACC	4	Positioning Completed Width		0 to 1073741824	1 reference unit	7	Immediately	
67 PnACE	4	NEAR Signal Width		1 to 1073741824	1 reference unit	1073741824	Immediately	

(cont'd)

Parameter No.	Size	Name	Setting Range	Units [Resolution]	Factory Setting	When Enabled	Classification
81 PnB02	4	Exponential Function Accel/Decel Time Constant	0 to 510000	µs [0.1 ms]	0	Immediately*6	Command Related Parameters
82 PnB04	4	Movement Average Time	0 to 510000	µs [0.1 ms]	0	Immediately*6	
83 PnB06	4	Final Travel Distance for External Positioning	–1073741823 to 1073741823	1 reference unit	100	Immediately	
84 PnB08	4	Homing Approach Speed	0 to 3FFFFFFFH	10^{-3} min^{-1}	5000 Value converted reference/s into $10^{-3}min^{-1}$	Immediately	
85 PnB0A	4	Homing Creep Speed	0 to 3FFFFFFFH	10^{-3} min^{-1}	500 Value converted reference/s into $10^{-3}min^{-1}$	Immediately	
86 PnB0C	4	Final Travel Distance for Homing	–1073741823 to 1073741823	1 reference unit	100	Immediately	
87 PnB0E	4	Monitor Selection 1	0 to F	–	1	Immediately	
		0000H	APOS				
		0001H	CPOS				
		0002H	PERR				
		0003H	LPOS1				
		0004H	LPOS2				
		0005H	FSPD				
		0006H	CSPD				
		0007H	TRQ				
		0008H	ALARM				
		0009H	MPOS				
		000AH	Reserved (Undefined value)				
		000BH	Reserved (Undefined value)				
		000CH	CMN1 (Common monitor 1)				
		000DH	CMN2 (Common monitor 2)				
		000EH	OMN1 (Optional monitor 1)				
		000FH	OMN2 (Optional monitor 2)				
88 PnB10	4	Monitor Selection 2	–	–	0	Immediately	
		0000H to 000FH	Same as Monitor Selection 1.				

*6. Change the setting when the reference is stopped (DEN is set to 1), because the change will affect the output during operation.

(cont'd)

Parameter No.	Size	Name	Setting Range	Units [Resolution]	Factory Setting	When Enabled	Classification
89 PnB12	4	Monitor Selection for SEL_MON1 (CMN1)	0 to 6	–	0	Immediately	Command Related Parameters

0000H	TPOS (Target position in the reference coordinates)
0001H	IPOS (Reference position in the reference coordinates)
0002H	POS_OFSET (Offset value set in the set coordinates command (POS_SET))
0003H	TSPD (Target speed)
0004H	SPD_LIM (Speed limit value)
0005H	TRQ_LIM (Torque limit value)

0006H

SV_STAT
Monitor
Byte 1: Current communications phase
00H: Phase 0
01H: Phase 1
02H: Phase 2
03H: Phase 3
Byte 2: Current control mode
00H: Position control mode
01H: Speed control mode
02H: Torque control mode
Byte 3: Reserved
Byte 4: Expansion signal monitor

Bit	Name	Contents	Value	Setting
Bit 0	LT_RDY1	Processing status for latch detection specified by SVCMD_CTRL, LT_REQ1	0	Latch detection not processed
			1	During latch detection processing
Bit 1	LT_RDY1	Processing status for latch detection specified by SVCMD_CTRL, LT_REQ2	0	Latch detection not processed
			1	During latch detection processing
Bit 2, Bit 3	LT_SEL1R	Latch signal	0	Phase C
			1	External input signal 1
			2	External input signal 2
			3	External input signal 3
Bit 4, Bit 5	LT_SEL2R	Latch signal	0	Phase C
			1	External input signal 1
			2	External input signal 2
			3	External input signal 3
Bit 6	Reserved (0)			

(cont'd)

Parameter No.	Size	Name		Setting Range	Units [Resolution]	Factory Setting	When Enabled	Classification
8A PnB14	4	Monitor Selection for SEL_MON2 (CMN2)		0 to 6	–	0	Immediately	Command Related Parameters
		0000H to 0006H	Same as Monitor Selection for SEL_MON1.					
8B PnB16	4	Origin Detection Range		0 to 250	1 reference unit	10	Immediately	
8C PnB18	4	Forward Torque Limit		0 to 800	1%	100	Immediately	
8D PnB1A	4	Reverse Torque Limit		0 to 800	1%	100	Immediately	
8E PnB1C	4	Zero Speed Detection Range		1000 to 10000000	10^{-3} min^{-1}	20000	Immediately	
8F PnB1E	4	Speed Coincidence Signal Output Width (read only)		0 to 100000	10^{-3} min^{-1}	10000	Immediately	
90 PnB20	4	Servo Command Control Field Enabled/Disabled (read only)		–	–	0FFF3F3FH	–	
		Bit 0	CMD_PAUSE (1: Enabled)					
		Bit 1	CMD_CANCEL (1: Enabled)					
		Bit 2, 3	STOP_MODE (1: Enabled)					
		Bit 4, 5	ACCFIL (1: Enabled)					
		Bit 6, 7	Reserved (0: Disabled)					
		Bit 8	LT_REQ1 (1: Enabled)					
		Bit 9	LT_REQ2 (1: Enabled)					
		Bit 10, 11	LT_SEL1 (1: Enabled)					
		Bit 12, 13	LT_SEL2 (1: Enabled)					
		Bit 14, 15	Reserved (0: Disabled)					
		Bit 16 to 19	SEL_MON1 (1: Enabled)					
		Bit 20 to 23	SEL_MON2 (1: Enabled)					
		Bit 24 to 27	SEL_MON3 (1: Enabled)					
		Bit 28 to 31	Reserved (0: Disabled)					

(cont'd)

Parameter No.	Size	Name		Setting Range	Units [Resolution]	Factory Setting	When Enabled	Classification
91 PnB22	4	Servo Command Status Field Enabled/Disabled (read only)		–	0	0FFF3F33H	–	Command Related Parameters
		Bit 0	CMD_PAUSE_CMP (1: Enabled)					
		Bit 1	CMD_CANCEL_CMP (1: Enabled)					
		Bit 2, 3	Reserved (0: Disabled)					
		Bit 4, 5	ACCFIL (1: Enabled)					
		Bit 6, 7	Reserved (0: Disabled)					
		Bit 8	L_CMP1 (1: Enabled)					
		Bit 9	L_CMP2 (1: Enabled)					
		Bit 10	POS_RDY (1: Enabled)					
		Bit 11	PON (1: Enabled)					
		Bit 12	M_RDY (1: Enabled)					
		Bit 13	SV_ON (1: Enabled)					
		Bit 14, 15	Reserved (0: Disabled)					
		Bit 16 to 19	SEL_MON1 (1: Enabled)					
		Bit 20 to 23	SEL_MON2 (1: Enabled)					
		Bit 24 to 27	SEL_MON3 (1: Enabled)					
		Bit 28 to 31	Reserved (0: Disabled)					
92 PnB24	4	I/O Bit Enabled/Disabled (Output) (read only)		–	–	007F01F0H	–	
		Bit 0 to 3	Reserved (0: Disabled)					
		Bit 4	V_PPI (1: Enabled)					
		Bit 5	P_PPI (1: Enabled)					
		Bit 6	P_CL (1: Enabled)					
		Bit 7	N_CL (1: Enabled)					
		Bit 8	G_SEL (1: Enabled)					
		Bit 9 to 11	G_SEL (0: Disabled)					
		Bit 12 to 15	Reserved (0: Disabled)					
		Bit 16 to 19	BANK_SEL (1: Enabled)					
		Bit 20 to 22	SO1 to SO3 (1: Enabled)					
		Bit 23	Reserved (0: Disabled)					
		Bit 24 to 31	Reserved (0: Disabled)					

(cont'd)

Parameter No.	Size	Name		Setting Range	Units [Resolution]	Factory Setting	When Enabled	Classification
93 PnB26	4	I/O Bit Enabled/Disabled (Input) (read only)		–	–	FF0FFEFEH	–	Command Related Parameters
		Bit 0	Reserved (0: Disabled)					
		Bit 1	DEC (1: Enabled)					
		Bit 2	P-OT (1: Enabled)					
		Bit 3	N-OT (1: Enabled)					
		Bit 4	EXT1 (1: Enabled)					
		Bit 5	EXT2 (1: Enabled)					
		Bit 6	EXT3 (1: Enabled)					
		Bit 7	ESTP (1: Enabled)					
		Bit 8	Reserved (0: Disabled)					
		Bit 9	BRK_ON (1: Enabled)					
		Bit 10	P-SOT (1: Enabled)					
		Bit 11	N-SOT (1: Enabled)					
		Bit 12	DEN (1: Enabled)					
		Bit 13	NEAR (1: Enabled)					
		Bit 14	PSET (1: Enabled)					
		Bit 15	ZPOINT (1: Enabled)					
		Bit 16	T_LIM (1: Enabled)					
		Bit 17	V_LIM (1: Enabled)					
		Bit 18	V_CMP (1: Enabled)					
		Bit 19	ZSPD (1: Enabled)					
		Bit 20 to 23	Reserved (0: Disabled)					
		Bit 24 to 31	I0_STS1 to 8 (1: Enabled)					

10.2 List of Monitor Displays

The following list shows the available monitor displays.

Parameter No.	Description	Unit
Un000	Motor rotating speed	min^{-1}
Un001	Speed reference	min^{-1}
Un002	Internal torque reference (in percentage to the rated torque)	%
Un003	Rotational angle 1 (encoder pulses from the phase-C origin: decimal display)	encoder pulse*3
Un004	Rotational angle 2 (from polarity origin (electric angle))	deg
Un005*1	Input signal monitor	–
Un006*2	Output signal monitor	–
Un007	Input reference pulse speed (valid only in position control)	min^{-1}
Un008	Position error amount (valid only in position control)	reference unit
Un009	Accumulated load ratio (in percentage to the rated torque: effective torque in cycle of 10 seconds)	%
Un00A	Regenerative load ratio (as a percentage of the processable regenerative power: regenerative power consumption in cycle of 10 seconds)	%
Un00B	Power consumed by DB resistance (in percentage to the processable power at DB activation: displayed in cycle of 10 seconds)	%
Un00C	Input reference pulse counter	reference unit
Un00D	Feedback pulse counter	encoder pulse*3
Un00E	Fully-closed feedback pulse counter	external encoder resolution*4
Un012	Total operation time	100 ms
Un013	Feedback pulse counter	reference unit
Un014	Effective gain monitor (gain settings 1 = 1, gain settings 2 = 2)	–
Un015	Safety I/O signal monitor	–
Un020	Motor rated speed	min^{-1}
Un021	Motor maximum speed	min^{-1}
Un030	The current backlash compensation value	0.1 reference unit
Un031	Backlash compensation setting limit value	0.1 reference unit

∗1. For details, refer to *7.3 Monitoring Input Signals*.
∗2. For details, refer to *7.4 Monitoring Output Signals*.
∗3. For details, refer to *4.4.3 Electronic Gear*.
∗4. For details, refer to *8.3.3 Setting Encoder Output Pulses (PAO, PBO, and PCO)*.

10.3 Parameter Recording Table

Use the following table for recording parameters.

Note: Pn10B, Pn170, and Pn408 have two kinds of digits: the digit which does not need the restart after changing the settings and the digit which needs the restart. The underlined digits of the factory setting in the following table show the digit which needs the restart.

Parameter	Factory Setting						Name	When Enabled
Pn000	0000						Basic Function Select Switch 0	After restart
Pn001	0000						Application Function Select Switch 1	After restart
Pn002	0011						Application Function Select Switch 2	After restart
Pn006	0002						Application Function Select Switch 6	Immediately
Pn007	0000						Application Function Select Switch 7	Immediately
Pn008	4000						Application Function Select Switch 8	After restart
Pn009	0010						Application Function Select Switch 9	After restart
Pn00B	0000						Application Function Select Switch B	After restart
Pn00C	0000						Application Function Select Switch C	After restart
Pn00D	0000						Application Function Select Switch D	After restart
Pn081	0000						Application Function Select Switch 81	After restart
Pn100	400						Speed Loop Gain	Immediately
Pn101	2000						Speed Loop Integral Time Constant	Immediately
Pn102	400						Position Loop Gain	Immediately
Pn103	100						Moment of Inertia Ratio	Immediately
Pn104	400						2nd Speed Loop Gain	Immediately
Pn105	2000						2nd Speed Loop Integral Time Constant	Immediately
Pn106	400						2nd Position Loop Gain	Immediately
Pn109	0						Feedforward Gain	Immediately
Pn10A	0						Feedforward Filter Time Constant	Immediately
Pn10B	0000						Application Function for Gain Select Switch	–
Pn10C	200						Mode Switch (torque reference)	Immediately
Pn10D	0						Mode Switch (speed reference)	Immediately
Pn10E	0						Mode Switch (acceleration)	Immediately
Pn10F	0						Mode Switch (position error)	Immediately
Pn11F	0						Position Integral Time Constant	Immediately
Pn121	100						Friction Compensation Gain	Immediately
Pn122	100						2nd Gain for Friction Compensation	Immediately
Pn123	0						Friction Compensation Coefficient	Immediately
Pn124	0						Friction Compensation Frequency Correction	Immediately
Pn125	100						Friction Compensation Gain Correction	Immediately
Pn131	0						Gain Switching Time 1	Immediately
Pn132	0						Gain Switching Time 2	Immediately
Pn135	0						Gain Switching Waiting Time 1	Immediately
Pn136	0						Gain Switching Waiting Time 2	Immediately

(cont'd)

Parameter	Factory Setting						Name	When Enabled
Pn139	0000						Automatic Gain Changeover Related Switch 1	Immediately
Pn13D	2000						Current Gain Level	Immediately
Pn140	0100						Model Following Control Related Switch	Immediately
Pn141	500						Model Following Control Gain	Immediately
Pn142	1000						Model Following Control Gain Compensation	Immediately
Pn143	1000						Model Following Control Bias (Forward Direction)	Immediately
Pn144	1000						Model Following Control Bias (Reverse Direction)	Immediately
Pn145	500						Vibration Suppression 1 Frequency A	Immediately
Pn146	700						Vibration Suppression 1 Frequency B	Immediately
Pn147	1000						Model Following Control Speed Feedforward Compensation	Immediately
Pn148	500						2nd Model Following Control Gain	Immediately
Pn149	1000						2nd Model Following Control Gain Compensation	Immediately
Pn14A	800						Vibration Suppression 2 Frequency	Immediately
Pn14B	100						Vibration Suppression 2 Compensation	Immediately
Pn14F	0011						Control Related Switch	After restart
Pn160	0010						Anti-Resonance Control Related Switch	Immediately
Pn161	1000						Anti-Resonance Frequency	Immediately
Pn162	100						Anti-Resonance Gain Compensation	Immediately
Pn163	0						Anti-Resonance Damping Gain	Immediately
Pn164	0						Anti-Resonance Filter Time Constant 1 Compensation	Immediately
Pn165	0						Anti-Resonance Filter Time Constant 2 Compensation	Immediately
Pn170	14<u>01</u>						Tuning-less Function Related Switch	–
Pn205	65535						Multiturn Limit Setting	After restart
Pn207	0010						Position Control Function Switch	After restart
Pn20A	32768						Number of External Scale Pitch	After restart
Pn20E	1						Electronic Gear Ratio (Numerator)	After restart
Pn210	1						Electronic Gear Ratio (Denominator)	After restart
Pn212	2048						Encoder Output Pulses	After restart
Pn22A	0000						Fully-closed Control Selection Switch	After restart
Pn230	0000						Position Control Expanded Function Switch	After reset
Pn231	0						Backlash Compensation Value	Immediately
Pn233	0						Backlash Compensation Time Constant	Immediately
Pn281	20						Encoder Output Resolution	After restart
Pn304	500						JOG Speed	Immediately
Pn305	0						Soft Start Acceleration Time	Immediately

(cont'd)

Parameter	Factory Setting						Name	When Enabled
Pn306	0						Soft Start Deceleration Time	Immediately
Pn310	0000						Vibration Detection Switch	Immediately
Pn311	100						Vibration Detection Sensibility	Immediately
Pn312	50						Vibration Detection Level	Immediately
Pn324	300						Moment of Inertia Calculating Start Level	Immediately
Pn401	100						Torque Reference Filter Time Constant	Immediately
Pn402	800						Forward Torque Limit	Immediately
Pn403	800						Reverse Torque Limit	Immediately
Pn404	100						Forward External Torque Limit	Immediately
Pn405	100						Reverse External Torque Limit	Immediately
Pn406	800						Emergency Stop Torque	Immediately
Pn407	10000						Speed Limit during Torque Control	Immediately
Pn408	0000						Torque Related Function Switch	–
Pn409	5000						1st Notch Filter Frequency	Immediately
Pn40A	70						1st Notch Filter Q Value	Immediately
Pn40B	0						1st Notch Filter Depth	Immediately
Pn40C	5000						2nd Notch Filter Frequency	Immediately
Pn40D	70						2nd Notch Filter Q Value	Immediately
Pn40E	0						2nd Notch Filter Depth	Immediately
Pn40F	5000						2nd Step 2nd Torque Reference Filter Frequency	Immediately
Pn410	50						2nd Step 2nd Torque Reference Filter Q Value	Immediately
Pn412	100						1st Step 2nd Torque Reference Filter Time Constant	Immediately
Pn415	0						Reserved	–
Pn423	0000						Reserved	–
Pn424	50						Torque Limit at Main Circuit Voltage Drop	Immediately
Pn425	100						Release Time for Torque Limit at Main Circuit Voltage Drop	Immediately
Pn456	15						Sweep Torque Reference Amplitude	Immediately
Pn460	0101						Notch Filter Adjustment Switch	Immediately
Pn501	10						Zero Clamp Level	Immediately
Pn502	20						Rotation Detection Level	Immediately
Pn503	10						Speed Coincidence Signal Output Width	Immediately
Pn506	0						Brake Reference - Servo OFF Delay Time	Immediately
Pn507	100						Brake Reference Output Speed Level	Immediately
Pn508	50						Waiting Time for Brake Signal When Motor Running	Immediately
Pn509	20						Instantaneous Power Cut Hold Time	Immediately
Pn50A	1881						Input Signal Selection 1	After restart
Pn50B	8882						Input Signal Selection 2	After restart
Pn50E	0000						Output Signal Selection 1	After restart

(cont'd)

Parameter	Factory Setting						Name	When Enabled
Pn50F	0100						Output Signal Selection 2	After restart
Pn510	0000						Output Signal Selection 3	After restart
Pn511	6543						Input Signal Selection 5	After restart
Pn512	0000						Output Signal Inverse Setting	After restart
Pn517	0000						Reserved	–
Pn51B	1000						Excessive Error Level Between Servomotor and Load Positions	Immediately
Pn51E	100						Excessive Position Error Warning Level	Immediately
Pn520	5242880						Excessive Position Error Alarm Level	Immediately
Pn522	7						Positioning Completed Width	Immediately
Pn524	1073741824						NEAR Signal Width	Immediately
Pn526	5242880						Excessive Position Error Alarm Level at Servo ON	Immediately
Pn528	100						Excessive Position Error Warning Level at Servo ON	Immediately
Pn529	10000						Speed Limit Level at Servo ON	Immediately
Pn52A	20						Multiplier per One Fully-closed Rotation	Immediately
Pn52B	20						Overload Warning Level	Immediately
Pn52C	100						Derating of Base Current at Detecting Overload of Motor	After restart
Pn52D	50						Reserved	–
Pn52F	0FFF						Reserved	–
Pn530	0000						Program JOG Operation Related Switch	Immediately
Pn531	32768						Program JOG Movement Distance	Immediately
Pn533	500						Program JOG Movement Speed	Immediately
Pn534	100						Program JOG Acceleration/Deceleration Time	Immediately
Pn535	100						Program JOG Waiting Time	Immediately
Pn536	1						Number of Times of Program JOG Movement	Immediately
Pn550	0						Analog Monitor 1 Offset Voltage	Immediately
Pn551	0						Analog Monitor 2 Offset Voltage	Immediately
Pn552	100						Analog Monitor Magnification (×1)	Immediately
Pn553	100						Analog Monitor Magnification (×2)	Immediately
Pn560	400						Remained Vibration Detection Width	Immediately
Pn561	100						Overshoot Detection Level	Immediately
Pn600	0						Regenerative Resistor Capacity	Immediately
Pn601	0						Reserved	–
Pn800	1040						Communications Control	Immediately
Pn801	0003						Application Function Select 6 (Software LS)	Immediately
Pn803	10						Origin Range	Immediately
Pn804	1073741823						Forward Software Limit	Immediately
Pn806	-1073741823						Reverse Software Limit	Immediately

(cont'd)

Parameter	Factory Setting						Name	When Enabled
Pn808	0						Absolute Encoder Origin Offset	Immediately *1
Pn80A	100						1st Linear Acceleration Constant	Immediately *2
Pn80B	100						2nd Linear Acceleration Constant	Immediately *2
Pn80C	0						Acceleration Constant Switching Speed	Immediately *2
Pn80D	100						1st Linear Deceleration Constant	Immediately *2
Pn80E	100						2nd Linear Deceleration Constant	Immediately *2
Pn80F	0						Deceleration Constant Switching Speed	Immediately *2
Pn810	0						Exponential Function Acceleration/ Deceleration Bias	Immediately *2
Pn811	0						Exponential Function Acceleration/ Deceleration Time Constant	Immediately *2
Pn812	0						Movement Average Time	Immediately *2
Pn814	100						Final Travel Distance for External Positioning	Immediately *2
Pn816	0000						Homing Mode Setting	Immediately *2
Pn817	50						Homing Approach Speed (Homing Approach Speed 1)	Immediately *2
Pn818	5						Homing Creep Speed (Homing Approach Speed 2)	Immediately *2
Pn819	100						Final Travel Distance for Homing	Immediately *2
Pn81E	0000						Input Signal Monitor Selection	Immediately
Pn81F	0010						Command Data Allocation	After restart
Pn820	0						Forward Latching Allowable Area	Immediately
Pn822	0						Reverse Latching Allowable Area	Immediately
Pn824	0000						Option Monitor 1 Selection	Immediately
Pn825	0000						Option Monitor 2 Selection	Immediately
Pn827	100						Linear Deceleration Constant 1 for Stopping	Immediately *2
Pn829	0						SVOFF Waiting Time (SVOFF at deceleration to stop)	Immediately
Pn82A	1813						Option Field Allocation 1	After restart
Pn82B	1D1C						Option Field Allocation 2	After restart
Pn82C	1F1E						Option Field Allocation 3	After restart
Pn82D	0000						Option Field Allocation 4	After restart
Pn82E	0000						Option Field Allocation 5	After restart
Pn833	0000						Motion Setting	After restart
Pn834	100						1st Linear Acceleration Constant 2	Immediately *2

*1. Enabled after the SENS_ON is entered.
*2. Change the setting when the reference is stopped (DEN is set to 1), because the change will affect the output during operation.

(cont'd)

Parameter	Factory Setting						Name	When Enabled
Pn836	100						2nd Linear Acceleration Constant 2	Immediately *2
Pn838	0						Acceleration Constant Switching Speed 2	Immediately *2
Pn83A	100						1st Linear Deceleration Constant 2	Immediately *2
Pn83C	100						2nd Linear Deceleration Constant 2	Immediately *2
Pn83E	0						Deceleration Constant Switching Speed 2	Immediately *2
Pn840	100						Linear Deceleration Constant 2 for Stopping	Immediately *2
Pn842	0						Homing Approach Speed (Homing Approach Speed12)	Immediately *2
Pn844	0						Homing CreepSpeed (Homing Approach Speed 22)	Immediately *2
Pn850	0						Latch Sequence Number	Immediately
Pn851	0						Continuous Latch Count	Immediately
Pn852	0000						Latch Sequence Signal 1 to 4 Setting	Immediately
Pn853	0000						Latch Sequence Signal 5 to 8 Setting	Immediately
Pn860	0000						SVCMD_IO (input signal monitor) Allocation 1	Immediately
Pn861	0000						SVCMD_IO (input signal monitor) Allocation 2	Immediately
Pn862	0000						SVCMD_IO (input signal monitor) Allocation 3	Immediately
Pn863	0000						SVCMD_IO (input signal monitor) Allocation 4	Immediately
Pn864	0000						SVCMD_IO (input signal monitor) Allocation 5	Immediately
Pn865	0000						SVCMD_IO (input signal monitor) Allocation 6	Immediately
Pn866	0000						SVCMD_IO (input signal monitor) Allocation 7	Immediately
Pn868	0000						SVCMD_IO (output signal monitor) Allocation 1	Immediately
Pn869	0100						SVCMD_IO (output signal monitor) Allocation 2	Immediately
Pn880	0						Station Address Monitor (for maintenance, read only)	Immediately
Pn881	0						Setting Transmission Byte Monitor [byte] (for maintenance, read only)	Immediately
Pn882	0						Transmission Cycle Setting Monitor [0.25 μs] (for maintenance, read only)	Immediately
Pn883	0						Communications Cycle Setting Monitor [x transmission cycle] (for maintenance, read only)	Immediately
Pn884	0000						Communications Controls 2	Immediately

*2. Change the setting when the reference is stopped (DEN is set to 1), because the change will affect the output during operation.

(cont'd)

Parameter	Factory Setting						Name	When Enabled
Pn88A	0						MECHATROLINK Receive Error Counter Monitor (for maintenance, read only)	Immediately
Pn890 to Pn8A6	0						Command Data Monitor at Alarm/ Warning Occurs (for maintenance, read only)	Immediately
Pn8A8 to Pn8BE	0						Response Data Monitor at Alarm/ Warning Occurs (for maintenance, read only)	Immediately
Pn900	0						Parameter Bank Number	After restart
Pn901	0						Parameter Bank Member Number	After restart
Pn902 to Pn910	0						Parameter Bank Member Definition	After restart
Pn920 to Pn95F	0						Parameter Bank Data (nonvolatile memory save disabled)	Immediately
01 PnA02	–						Encoder Type (read only)	–
02 PnA04	–						Motor Type (read only)	–
03 PnA06	–						Semi-closed/Fully-closed Type (read only	–
04 PnA08	–						Rated Speed (read only)	–
05 PnA0A	–						Maximum Output Speed (read only)	–
06 PnA0C	–						Speed Multiplier (read only)	–
07 PnA0E	–						Rated Torque (read only)	–
08 PnA10	–						Maximum Output Torque (read only)	–
09 PnA12	–						Torque Multiplier (read only)	–
0A PnA14	–						Resolution (read only)	–
21 PnA42	1						Electronic Gear Ratio (Numerator)	After restart
22 PnA44	1						Electronic Gear Ratio (Denominator)	After restart
23 PnA46	0						Absolute Encoder Origin Offset	Immediately*1
24 PnA48	65535						Multiturn Limit Setting	After restart
25 PnA4A	0000H						Limit Setting	After restart
26 PnA4C	1073741823						Forward Software Limit	Immediately
27 PnA4E	0						Reserved (Do not use.)	Immediately

*1. Available after the SENS_ON command is input.

Note: When using parameters that are enabled after restarting the SERVOPACK, a CONFIG command must be input or the power must be turned OFF and then ON again.

(cont'd)

Parameter	Factory Setting						Name	When Enabled
28 PnA50	-1073741823						Reverse Software Limit	Immediately
29 PnA52	0						Reserved (Do not use.)	Immediately
41 PnA82	0						Speed Unit	After restart
42 PnA84	0						Speed Base Unit	After restart
43 PnA86	0						Position Unit	After restart
44 PnA88	0						Position Base Unit	After restart
45 PnA8A	0						Acceleration Unit	After restart
46 PnA8C	4						Acceleration Base Unit	After restart
47 PnA8E	1						Torque Unit	After restart
48 PnA90	0						Torque Base Unit	After restart
49 PnA92	0601011FH						Compliance Unit System (read only)	–
61 PnAC2	40000						Speed Loop Gain	Immediately
62 PnAC4	20000						Speed Loop Integral Time Constant	Immediately
63 PnAC6	40000						Position Loop Gain	Immediately
64 PnAC8	0						Feedforward Compensation	Immediately
65 PnACA	0						Position Loop Integral Time Constant	Immediately
66 PnACC	7						Positioning Completed Width	Immediately
67 PnACE	1073741824						NEAR Signal Width	Immediately
81 PnB02	0						Exponential Function Accel/Decel Time Constant	Immediately*2
82 PnB04	0						Movement Average Time	Immediately*2
83 PnB06	100						Final Travel Distance for External Positioning	Immediately
84 PnB08	5000 Value converted reference/s into 10^{-3} min^{-1}						Homing Approach Speed	Immediately

*2. Change the setting when the reference is stopped (DEN is set to 1), because the change will affect the output during operation.

Note: When using parameters that are enabled after restarting the SERVOPACK, a CONFIG command must be input or the power must be turned OFF and then ON again.

(cont'd)

Parameter	Factory Setting						Name	When Enabled
85 PnB0A	500 Value converted reference/s into 10^{-3} min^{-1}						Homing Creep Speed	Immediately
86 PnB0C	100						Final Travel Distance for Homing	Immediately
87 PnB0E	1						Monitor Selection 1	Immediately
88 PnB10	0						Monitor Selection 2	Immediately
89 PnB12	0						Monitor Selection for SEL_MON1 (CMN1)	Immediately
8A PnB14	0						Monitor Selection for SEL_MON2 (CMN2)	Immediately
8B PnB16	10						Origin Detection Range	Immediately
8C PnB18	100						Forward Torque Limit	Immediately
8D PnB1A	100						Reverse Torque Limit	Immediately
8E PnB1C	20000						Zero Speed Detection Range	Immediately
8F PnB1E	10000						Speed Coincidence Signal Output Width (read only)	Immediately
90 PnB20	0FFF3F3FH						Servo Command Control Field Enabled/Disabled (read only)	–
91 PnB22	0FFF3F33H						Servo Command Status Field Enabled/Disabled (read only)	–
92 PnB24	007F01F0H						I/O Bit Enabled/Disabled (Output) (read only)	–
93 PnB26	FF0FFEFEH						I/O Bit Enabled/Disabled (Input) (read only)	–

Index

Symbols

/BK - 4-11
/CLT - 4-34
/COIN - 4-53
/HWBB1 - 4-61
/HWBB2 - 4-61
/N-CL - 4-33
/NEAR- 4-54
/P-CL- 4-33
/S-RDY - 4-51
/TGON - 4-51
/V-CMP - 4-52
/VLT - 4-55
/WARN - 4-50

A

absolute data reception sequence - 4-42
absolute data request (SENS_ON) - 4-38
absolute encoder battery alarm (A.830) - 4-39
absolute encoder origin offset - 4-49
absolute encoders - 4-35
connection - 4-36
set up and initialization- 4-41
AC reactor - 3-36
additional adjustment function - 5-54
advanced autotuning (Fn201)- 5-17
anti-resonance control adjustment function - - - - - - - - - - - - - 5-24
calculating moment of inertia - 5-20
feedforward - 5-25
friction compensation- 5-25
mode selection - 5-20
notch filter - 5-24
STROKE (travel distance) setting - - - - - - - - - - - - - - - - - - 5-21
type selection - 5-20
vibration suppression - 5-24
advanced autotuning by reference (Fn202)- - - - - - - - - - - - - - - - 5-27
anti-resonance control adjustment function - - - - - - - - - - - - - 5-31
feedforward - 5-32
friction compensation- 5-32
mode selection - 5-29
notch filter - 5-31
type selection - 5-29
vibration suppression - 5-31
alarm history display (Fn000) - 6-3
alarm reset - 9-2
alarm reset method- 4-50
ALM - 4-50
ambient/storage humidity - 1-5
anti-resonance control adjustment function (Fn204) - - - - - - - - - 5-43
application example of safety functions- - - - - - - - - - - - - - - - - - - 4-65
automatic gain switching - 5-55
automatic offset-signal adjustment of the motor current detection signal (Fn00E) - 6-19
automatically setting the notch filter - 5-12

B

backlash compensation function- 5-61
baseblock - 2-2
battery
battery case - 4-35
battery replacement - 4-39
installing the battery in the host controller- - - - - - - - - - - - - 4-37
using an encoder cable with a battery case- - - - - - - - - 4-36, 4-39
baud rate - 1-8
BB - iii, 4-31
brake operation delay time - 4-10
brake signals - 4-11

C

CCW- 4-4, 8-14
CE - xiv
changing detection timing of overload (low load) alarm (A.720) - 4-21
changing detection timing of overload warning (A.910) - - - - - - 4-20
checking output torque limiting during operation - - - - - - - - - - - 4-34
clearing alarm history (Fn006) - 6-14
CN1 - 3-18
CN2 - 3-28
CN3 - 1-2
CN6A - 1-2, 3-27
CN6B - 1-2, 3-27
CN7 - 1-2
CN8 - 3-19
coast to a stop- 4-6
communication protocol- 1-8
compatible adjustment function- 5-67
confirming safety functions- 4-66
connecting a reactor for harmonic suppression- - - - - - - - - - - - - 3-36
connecting a safety function device - 4-67
connecting regenerative resistors - 3-30
connection example of EDM1 output signal - - - - - - - - - - - - - - 4-64
connection example of HWBB input signals - - - - - - - - - - - - - - 4-61
connection to host controller (interface)
sequence input circuit - 3-24
sequence output circuit- 3-25
connector CN5 for analog monitor- 5-5
current control mode selection- 5-60
current gain level setting - 5-60
CW- 4-4, 8-14

D

DC power supply input
parameter setting- 3-14
wiring example- 3-15
DC reactor - 3-36
decelerate to stop - 4-6
digital operator displays during testing without motor - - - - - - - - 4-31
DIP switch - 1-2
setting - 4-3
display of servomotor ID in feedback option module (Fn01F) - - 6-31
display of SERVOPACK and servomotor ID (Fn01E) - - - - - - - - 6-29
dynamic brake - 4-6

E

EasyFFT (Fn206) - 6-35
EDM1 - 4-63
electronic gear - 4-24
electronic gear ratio - 4-24
encoder output pulse setting - 4-27
encoder output pulses- 4-26
encoder resolution - 4-27
encoder signal (CN2) names and functions - - - - - - - - - - - - - - - 3-28
error detection in HWBB signal- 4-60

european directives - xiv
examples of encoder connection - 3-28
external device monitor - 4-63
external latch signal 1 - 3-22
external latch signal 2 - 3-22
external latch signal 3 - 3-22
external regenerative resistor - 3-30
external torque limit - 4-33

F

feedforward - 5-67
feedforward compensation - 5-67
FG - 3-19, 3-20
forward external torque limit - 4-33
friction compensation - 5-58
fully-closed loop control
alarm detection - 8-21
analog monitor signal - 8-22
analog signal input timing - 8-5
connection example of external encoder by Heidenhain - - - - - 8-6
connection example of external encoder by Magnescale Co., Ltd. - 8-6
connection example of external encoder by Mitutoyo Corporation - 8-6
connection example of external encoder by Renishaw plc - - - - 8-6
electronic gear - 8-20
external absolute encoder data reception sequence - - - - - - - - 8-17
internal block diagram - 8-3
motor rotation direction - 8-14
serial converter unit - 8-4
setting encoder output pulses - 8-16
sine wave pitch (frequency) for an external encoder - - - - - - - 8-16
speed feedback method - 8-22
system configuration - 8-2

G

gain adjustment of analog monitor output (Fn00D) - - - - - - - - - - 6-17
Gr.1 alarm - 4-15
Gr.2 alarm - 4-15
grounding - 3-34
G-SEL of servo command output signal (SVCMD_IO) - - - - - - - 5-55

H

hard wire base block (HWBB) function - - - - - - - - - - - - - - - - - - 4-57
hard wire base block (HWBB) state - 4-58
harmonized standards - xiv, 1-5
holding brakes - 4-9
homing deceleration switch signal - 3-22

I

initial incremental pulses - 4-43
initializing parameter settings (Fn005) - - - - - - - - - - - - - - - - - - 6-13
input signal (CN1)
allocations - 3-21
monitoring - 7-4
names and functions - 3-18
instantaneous power interruption settings - - - - - - - - - - - - - - - - - 4-16
internal block diagrams - 1-9
internal torque limit - 4-32

J

JOG operation (Fn002) - 6-4

L

LED (CN) - 1-2, 1-6
LED (L1) - 1-2, 1-6
LED (L2) - 1-2, 1-6
limit switches - 4-5
limiting torque - 4-32
list of alarms - 9-2
list of monitor displays - 7-2
list of warnings - 9-23

M

main circuit
names and functions of terminals - 3-2
wires - 3-4, 3-11
wiring examples - 3-5
manual gain switching - 5-55
manual offset-signal adjustment of the motor current detection signal (Fn00F) - 6-20
MECHATROLINK-III communications connector - - - - - - - 1-2, 3-27
MECHATROLINK-III function specifications - - - - - - - - - - - - - - - 1-8
monitor displays (Un□□□) - 2-7, 10-45
monitor factor - 5-6
monitoring safety input signals - 7-7
multiturn limit disagreement alarm (A.CC0) - - - - - - - - - - - - - - 4-48
multiturn limit setting - 4-47

N

noise filter - 3-34
N-OT - 4-5
notch filter - 5-72

O

offset adjustment of analog monitor output (Fn00C) - - - - - - - - - 6-15
one-parameter tuning (Fn203) - 5-34
anti-resonance control adjustment function - - - - - - - - - - - - 5-39
feedforward - 5-40
friction compensation - 5-40
notch filter - 5-39
tuning mode - 5-35, 5-37
type selection - 5-36, 5-37
one-parameter tuning example - 5-41
online vibration monitor (Fn207) - 6-39
origin search (Fn003) - 6-6
origin setting (Fn020) - 6-33
output phase form - 4-26
output signal (CN1)
allocations - 3-23
monitoring - 7-6
names and functions - 3-19
overtravel (OT) - 4-5
overtravel warning function - 4-7

P

panel display - 2-2
PAO - 4-26
parameter
classification - 2-4
how to make numeric settings using parameters - - - - - - - - - - 2-5
how to select functions using parameters - - - - - - - - - - - - - - - 2-6
parameters for numeric settings - iv, 2-4
parameters for selecting functions - - - - - - - - - - - - - - - - - - iv, 2-4
tuning parameters - 2-4
parameter recording table - 10-46
parameters - 10-3
PBO - 4-26
PCO - 4-26
position integral - 5-72
positioning completed signal - 4-53

positioning near signal - 4-54
P-OT - 4-5
precautions for safety functions - 4-69
precautions for wiring - 3-17
precautions on connecting noise filter - 3-35
program JOG operation (Fn004) - 6-8
protection class/pollution degree - 1-5

R

reference unit - 4-24
resetting configuration errors in option modules (Fn014) - - - - - - 6-26
resetting the HWBB state - 4-59
reverse external torque limit - 4-33
risk assessment - 4-58
rotary switch - 1-2, 4-3
rotation detection output signal - 4-51
rotational serial data - 4-43, 4-45
RUN - 4-31

S

S1 - 1-2, 4-3
S2 - 1-2, 4-3
S3 - 1-2, 4-3
safety function - 4-57
safety function signal (CN8) names and functions - - - - - - - - - - - 3-19
safety precautions on adjustment of servo gains - - - - - - - - - - - - - 5-8
SEMI F47 function - 4-17
servo alarm output signal - 4-50
servo gains - 5-3
servo ready output signal - 4-51
servomotor model display (Fn011) - 6-24
servomotor rotation direction - 4-4
SERVOPACK
basic specifications - 1-5
example of servo system configuration (SGDV-□□□A21A) - 1-18
example of servo system configuration (SGDV-□□□D21A) - 1-20
example of servo system configuration (SGDV-□□□F21A) - 1-17
inspection and maintenance - 1-22
MECHATROLINK-III function specifications - - - - - - - - - - - 1-8
model designation - 1-21
part names - 1-2
precautions when using more than one SERVOPACK - - - - - 3-16
ratings - 1-3
status display - 2-2
setting encoder output pulse - 4-27
setting motor overload detection level - - - - - - - - - - - - - - - - - - - 4-20
setting regenerative resistor capacity - - - - - - - - - - - - - - - - - - - 3-32
single-phase, 200 V power supply input
main circuit wire for SERVOPACKs - - - - - - - - - - - - - - - - - 3-11
molded-case circuit breaker - 3-13
parameter setting - 3-11
power supply capacities and power losses - - - - - - - - - - - - - 3-13
wire types - 3-3
wiring example - 3-12
soft start time setting - 1-5
software limit settings - 4-8
software reset (Fn030) - 6-34
software version display (Fn012) - 6-25
specifications of EDM1 output signal - - - - - - - - - - - - - - - - - - - 4-64
specifications of HWBB signals - 4-61
speed coincidence signal - 4-52
speed control range - 1-5
speed detection method selection - 5-60
speed limit in torque control - 4-55
speed regulation - 1-5
standard power supply input
main circuit wires for SERVOPACKs - - - - - - - - - - - - - - - - - 3-4
molded-case circuit breaker - 3-9
power supply capacities and power losses - - - - - - - - - - - - - - 3-8
wire types - 3-3
wiring examples - 3-5
station address - 1-8
stopping method for servomotor after SV_OFF command is received - 4-14
stopping method for servomotor when an alarm occurs - - - - 4-15, 9-2
storage temperature - 1-5
surrounding air temperature - 1-5
switching condition A - 5-55
switching gain settings - 5-54

T

test without motor function - 4-28
time stamps - 6-3
torque control tolerance - 1-5
torque limit function for low DC power supply voltage for main circuit - 4-17
torque reference filter - 5-70
transmission cycle - 1-8
trial operation
inspection and checking before trial operation - - - - - - - - - - 4-22
trial operation via MECHATROLINK-III - - - - - - - - - - - - - 4-23
troubleshooting
alarms - 9-7
warnings - 9-25
troubleshooting malfunction based on operation and conditions of the servomotor - 9-31
tuning parameters - 2-4
tuning-less function - 5-11
tuning-less level settings (Fn200) - 5-12

U

UL - xiv
using the mode switch (P/PI switching) - - - - - - - - - - - - - - - - - 5-68
utility functions (Fn□□□) - 2-3, 10-2

V

vibration detection level initialization (Fn01B) - - - - - - - - - - - - 6-27
vibration suppression function (Fn205) - - - - - - - - - - - - - - - - - 5-49
vibration/shock resistance - 1-5

W

warning output signal - 4-50
wiring for noise control - 3-33
wiring MECHATROLINK-III communications - - - - - - - - - - - - 3-27
write prohibited setting (Fn010) - 6-22

Z

zero clamp mode - 4-6

Revision History

The revision dates and numbers of the revised manuals are given on the bottom of the back cover.

MANUAL NO. SIEP S800000 64A

Published in Japan September 2009 09-3 ◇0-1

- September 2009: Date of publication
- 09-3: Date of original publication
- ◇0: Revision number
- -1: WEB revision number

Date of Publication	Rev. No.	WEB Rev. No.	Section	Revised Content
September 2014	◇7	0	8.1.3(2)	Revision: Description of analog signal input timing
July 2014	◇6	0	4.9.5	Addition: Information on types of safety function's jumper connectors
			5.1.3	Revision: Output unit when using an SGMCS direct drive servomotor
			8.1.4, 8.3.5	Addition: External encoder by Heidenhain (models: LIC4100-series models)
			9.1.1, 9.1.2	Addition: A.F50
			10.1.2, 10.3	Addition: Pn884
July 2013	◇5	0	Preface, 1.3.2	Revision: Description of Harmonized Standards EN 55011 /A2 changed to EN 55011
			Back cover	Revision: Address
June 2012	◇4	0	1.4.4, 1.4.5, 1.5.2	Revision: SERVOPACK model No. SGDV-R70A21A → SGDV-R70A21□ SGDV-R90A21A → SGDV-R90A21□ SGDV-1R6A21A → SGDV-1R6A21□ SGDV-2R8A21A → SGDV-2R8A21□
			4.9.5	Addition: Description of safety function's jumper connector (new model)
			7.1, 10.1.2	Addition: Un022 (Installation environment monitor)
			10.1.2	Addition: Pn868 (SVCMD_IO (output signal monitor) Allocation 1), Pn869 (SVCMD_IO (output signal monitor) Allocation 2)
February 2012	◇3	0	–	Based on Japanese user's manual, SIJP S800000 64E <6> printed in August 2011.
			All chapters	Completely revised
			Back cover	Revision: Address
September 2011	◇2	0	–	Based on Japanese user's manual, SIJP S800000 64D <5> printed in May 2011.
			All chapters	Completely revised
December 2010	◇1	0	Front cover	Revision: Format
			Preface, 3.3.2, 3.4.2, 4.3.4 (1)	Addition: Precautions on the use of the holding brake signal
			1.3.1, 1.4.3, 1.5.2, 1.6, 3.1.1, 3.1.6, 3.7.1 (3), 4.3.5	Addition: Single-phase 200 V, SGDV-120A21A008000 SERVOPACK
			3.4.1 (2), 3.4.2 (3), 4.8.1, 4.8.1 (6), 4.8.2 (1), 4.8.3 (1)	Revision: Connection example
			4.3.2	Revision: Precautions on the installation of limit switches
			4.3.1, 10.1.2	Revision: Description of the first digit (Direction Selection) of Pn000
			4.3.4	Revision: Timing chart of holding brakes
			4.4.3 (1)	Revision: Factory setting of Pn20E
			4.7.4 (2)	Revision: Key of step 3
			8.2.4 (2)	Revision: Setting unit of Pn281
			Back cover	Revision: Address, format

Date of Publication	Rev. No.	WEB Rev. No.	Section	Revised Content
April 2010	◇0	2	3.5	Revision: Diagram
			4.7.5 (2)	Revision: Description of the initial incremental pulses
			5.3.2, 5.4.2, 5.5.2, 5.7.1	Addition: Description of CAUTION
			5.8.1 (4), (5)	Revision: Applicable control method
			6.15 (1)	Revision: Operating Procedure
			8.2.1	Addition: Description of Note
			9.1.1, 9.1.2	Addition: A.E72
September 2009		1	Preface	Addition: Warranty
			Back cover	Revision: Address
March 2009		0	–	First edition

AC Servo Drives

Σ-V Series

USER'S MANUAL
Design and Maintenance

Rotational Motor
MECHATROLINK-III Communications Reference

IRUMA BUSINESS CENTER (SOLUTION CENTER)
480, Kamifujisawa, Iruma, Saitama 358-8555, Japan
Phone 81-4-2962-5151 Fax 81-4-2962-6138
http://www.yaskawa.co.jp

YASKAWA AMERICA, INC.
2121 Norman Drive South, Waukegan, IL 60085, U.S.A.
Phone 1-800-YASKAWA (927-5292) or 1-847-887-7000 Fax 1-847-887-7310
http://www.yaskawa.com

YASKAWA ELÉTRICO DO BRASIL LTDA.
Avenida Piraporinha 777, Diadema, São Paulo, 09950-000, Brasil
Phone 55-11-3585-1100 Fax 55-11-3585-1187
http://www.yaskawa.com.br

YASKAWA EUROPE GmbH
Hauptstraβe 185, Eschborn 65760, Germany
Phone 49-6196-569-300 Fax 49-6196-569-398
http://www.yaskawa.eu.com

YASKAWA ELECTRIC KOREA CORPORATION
9F, Kyobo Securities Bldg. 26-4, Yeouido-dong, Yeongdeungpo-gu, Seoul, 150-737, Korea
Phone 82-2-784-7844 Fax 82-2-784-8495
http://www.yaskawa.co.kr

YASKAWA ELECTRIC (SINGAPORE) PTE. LTD.
151 Lorong Chuan, #04-02A, New Tech Park 556741, Singapore
Phone 65-6282-3003 Fax 65-6289-3003
http://www.yaskawa.com.sg

YASKAWA ELECTRIC (CHINA) CO., LTD.
12F, Carlton Bld., No.21 HuangHe Road, HuangPu District, Shanghai 200003, China
Phone 86-21-5385-2200 Fax 86-21-5385-3299
http://www.yaskawa.com.cn

YASKAWA ELECTRIC (CHINA) CO., LTD. BEIJING OFFICE
Room 1011, Tower W3 Oriental Plaza, No.1 East Chang An Ave.,
Dong Cheng District, Beijing 100738, China
Phone 86-10-8518-4086 Fax 86-10-8518-4082

YASKAWA ELECTRIC TAIWAN CORPORATION
9F, 16, Nanking E. Rd., Sec. 3, Taipei 104, Taiwan
Phone 886-2-2502-5003 Fax 886-2-2505-1280

YASKAWA ELECTRIC CORPORATION

In the event that the end user of this product is to be the military and said product is to be employed in any weapons systems or the manufacture thereof, the export will fall under the relevant regulations as stipulated in the Foreign Exchange and Foreign Trade Regulations. Therefore, be sure to follow all procedures and submit all relevant documentation according to any and all rules, regulations and laws that may apply.

Specifications are subject to change without notice for ongoing product modifications and improvements.

© 2009-2014 YASKAWA ELECTRIC CORPORATION. All rights reserved.

MANUAL NO. SIEP S800000 64H

Published in Japan September 2014 09-3 ⑦-0
13-6-9
Original instructions